NO	PART NAME	MATERIAL	Q'TY	REMARK
1	COVER	AC4C	1	
2	BODY	AC2B	1	
3	LEVER	SM45C	1	
4	HANDLE	AC2B	1	
5	BASE	GC25	1	
6	INDICATOR	SM45C	1	
7	BUSHING	SUS304	1	
8	PILLAR	SUS304	2	
9	OPTION HOUSING	AC2B	1	

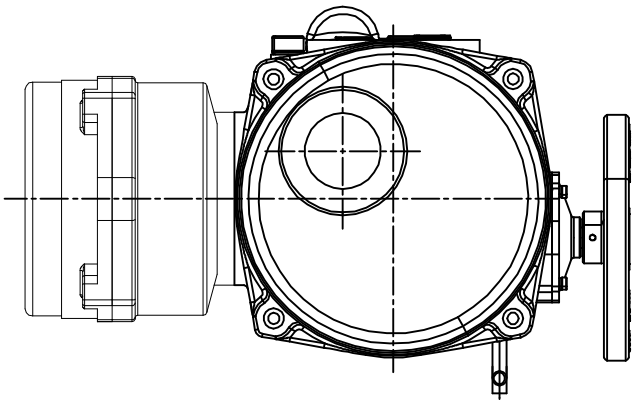

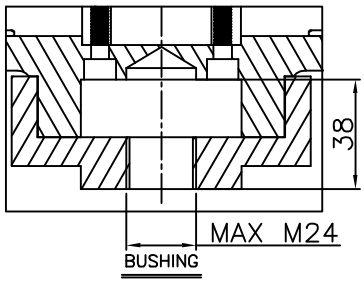

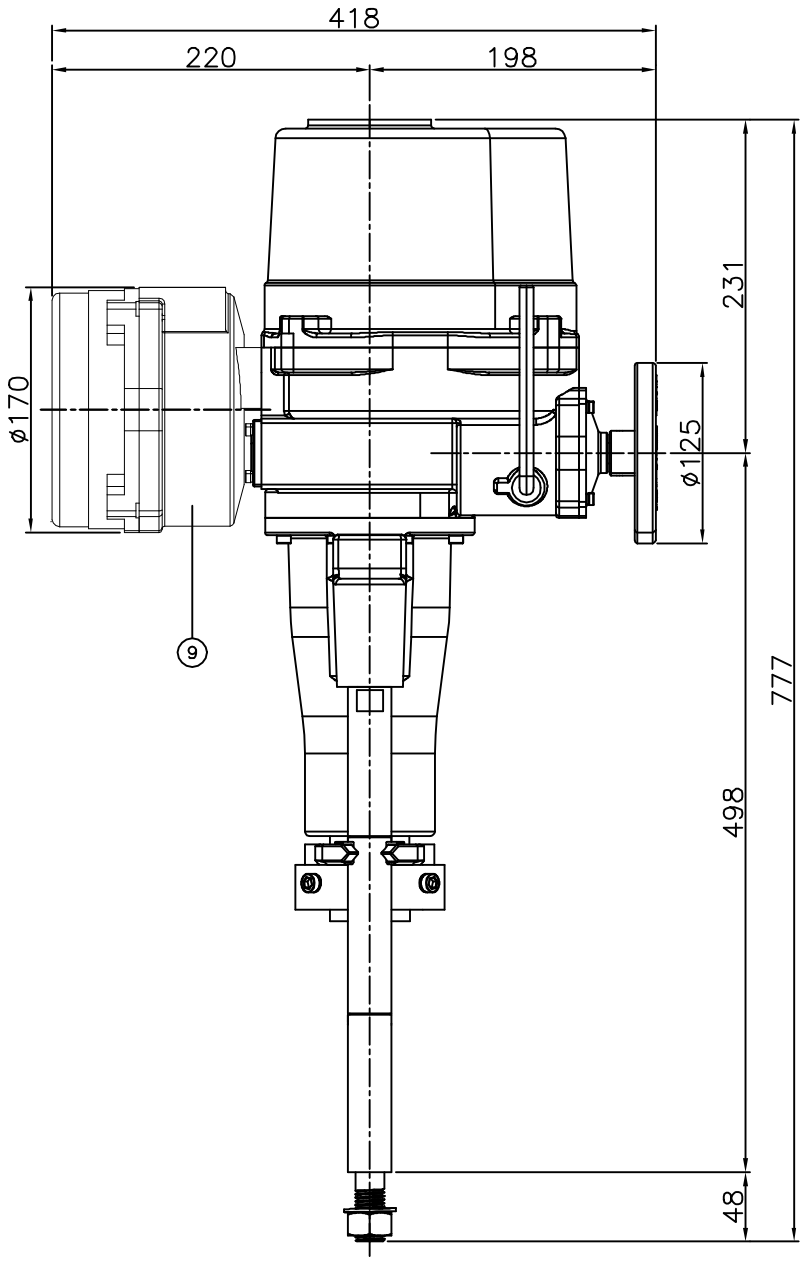

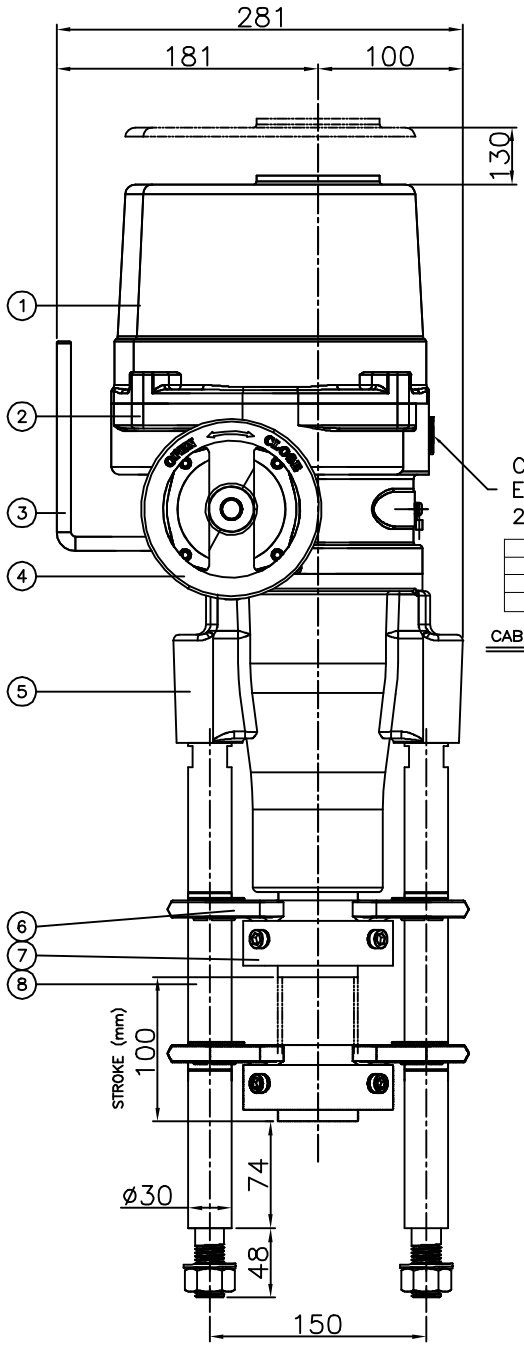

"A"
PF3/4
M20
NPT3/4

CABLE ENTRIES

NL35	1
NL25	1
NL20	1
APPLICATION	

DRAW T.G KANG	PROJ.	SCALE 1/1	PART NAME NL20, NL25, NL35 ASS'Y
	DIM. mm	DATE 12.09.25	
CHECK M.Y HWANG	NOAH		DWG NO. L020-702-B
APPD	NOAH ACTUATION CO., LTD		1 OF 1 SHEET DWG SIZE A1