rotork®

Keeping the World Flowing
for Future Generations

IQ3 Perform Range

Multi-turn and part-turn
electric valve actuators

IQ3® Perform

The IQ3 Perform actuator offers a cost-effective introductory level to IQ3 ownership, providing reliable valve operation for everyday needs.

Rotork Group

Rotork is a market-leading global provider of mission-critical flow control and instrumentation solutions for the industrial actuation and flow control markets. These include oil and gas, water and wastewater, power, chemical, process and industrial applications.

Customers rely on us for innovative, high quality and dependable solutions for managing the flow of liquids, gases and powders. We help customers around the world to improve efficiency, reduce emissions, minimise their environmental impact and assure safety.

Our reliability record is second to none. Our products are designed with safety and performance at their core and are put through vigorous testing and certified to international standards. Our products are certified for use in the world's most dangerous and hazardous areas.

Partnering with us provides the following:

- Assured safety and reliability
- Industry leading accuracy and efficiency
- Proven technology that works with all network control systems
- Product range with solutions to suit every application
- Assistance with plant planning, development and maintenance through our local support services
- We have innovative research and development centers throughout the world

Contents

Section	Page
Rotork	02
IQ3 Perform range product features	04
Inside the IQ3 Perform actuators	06
Actuator Selection	08
IQ3 Perform design features	10
Fieldbus Compatibility	14
Rotork *Master Station* - Network Capabilities	15
Actuator Specification (full contents list on p16)	16
Performance Summaries	17
Actuator Drive Couplings	22
Standard Specifications	24
Rotork Service	44

© Rotork 2025 all rights reserved. The name Rotork is a registered trademark. Rotork recognises all registered trademarks. The Bluetooth® word mark and logos are registered trademarks owned by Bluetooth SIG, Inc. and any use of such marks by Rotork is under license. Published and produced in the UK. POLTG0425. Rotork reserves the right to amend and change specifications without prior notice. For the latest version visit rotork.com

Cost-effective actuation for everyday valves with renowned **quality and reliability**

- Continuous position tracking at all times, even without power
- On power loss, remote indication is maintained
- Oil bath lubrication provides extended life and the ability to mount in any orientation
- Increased protection by using independent torque and position sensing
- Wide range of adjustable speeds available
- Easy installation and maintenance using detachable thrust bases
- Water ingress protection, not reliant on terminal cover or cable gland sealing – double-sealed to IP66/68 7 m for 72 hours
- Safe, motor-independent, handwheel operation available at all times
- Control and commissioning via Bluetooth® Setting Tool *Pro* handset (BTST) or local control knobs
- Field upgradeable and configurable control and indication options
- Rapid and secure commissioning and configuration even without power
- Detailed trend analysis and diagnostic data available for asset management

IQ3® Perform

IQ3 Perform actuator

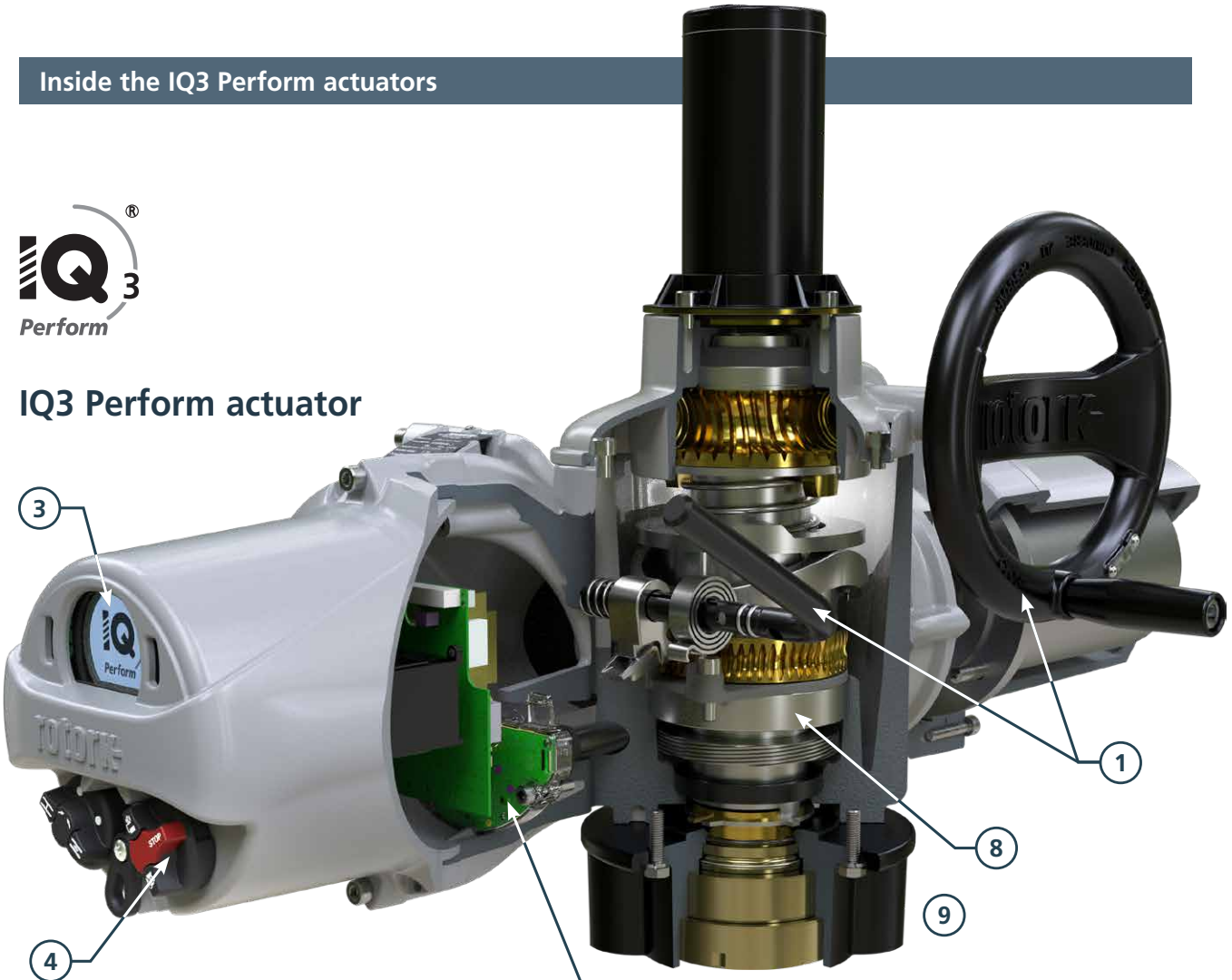

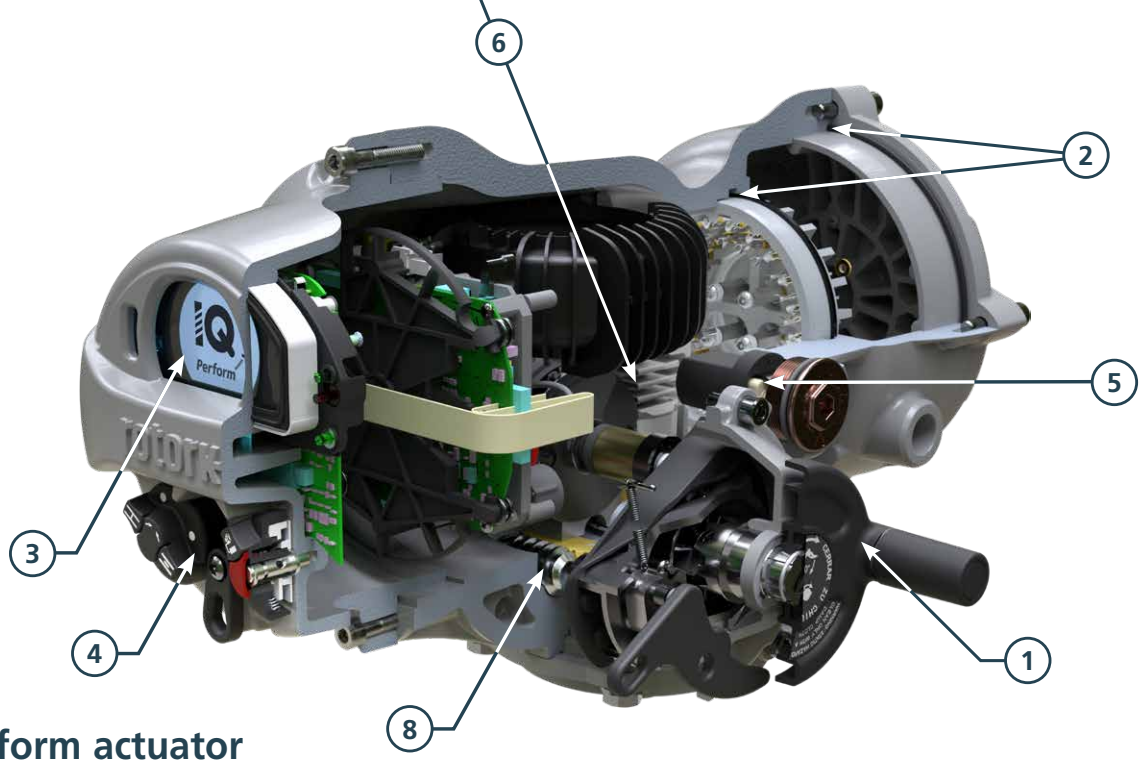

IQT3 Perform actuator

1. Hand operation

Direct-drive and geared handwheels are sized for effective manual operation of the valve. Handwheel drive is independent of the motor drive and is selected with a lockable lever for safe operation even when the motor is running. See Section 9.1.

2. Environmental sealing IP66/68; 7 m for 72 hours

The double-sealed terminal compartment results in the actuator enclosure being completely sealed, protecting the actuator from environmental ingress. See Section 5.

3. Display

The dual mode display allows a high temperature range of operation for position (-50 to +70 °C).

4. Local controls

Open/Close and Local/Stop/Remote selectors are magnetically coupled to the solid state switches inside the cover. This along with double-sealing, further enhances the non-intrusive protection of the actuator. See Section 7.2.

5. Battery

A battery is provided to support the display, remote indication and configuration when no mains power is available. See Section 9.12.

6. Position control

Patented absolute position encoder is provided to enable robust, high accuracy measurement of up to 8,000 actuator output rotations under all conditions, including loss of mains power. See Section 9.7.

7. Torque sensor

State-of-the-art piezo torque sensor for IQ provides reliable torque measurement over a wide temperature range. See Section 9.6.

8. Drive train

Simple, proven, robust and lubricated for life in a self-contained oil bath, with the ability to perform in any orientation. See Section 9.2.

9. Separable bases

For all actuator frame sizes, the thrust and non-thrust base types are separate from the main gearcase facilitating easy installation. See Section 2.

10. Rotork Bluetooth® Setting Tool *Pro*

Intrinsically-safe setting tool used for commissioning and data logger download and export. See Section 7.2.

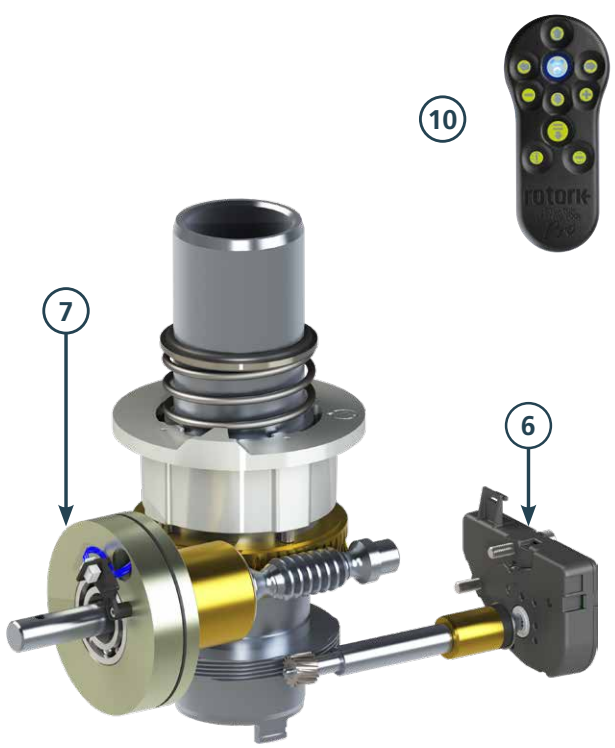

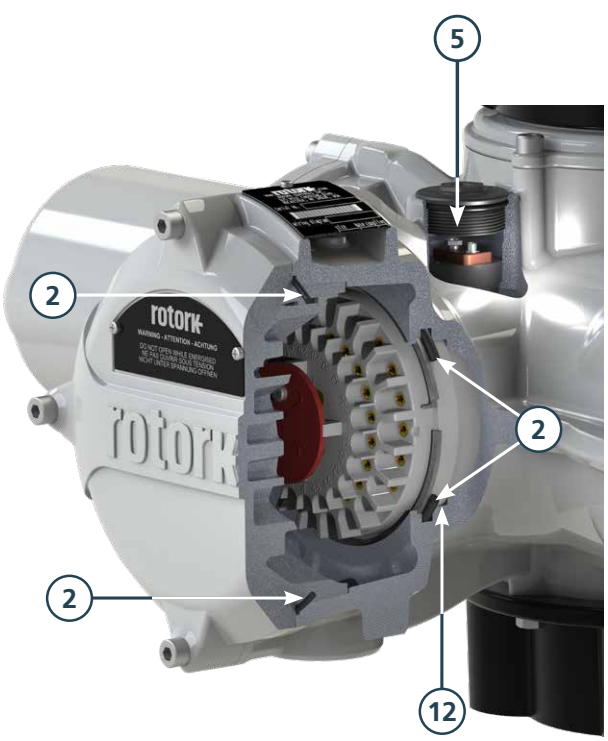

For linear valve types

Actuator selection for linear valve types: Wedge, conduit/slab, parallel slide, globe, choke, knife, sluice/weir, diaphragm.

Torque/thrust range - actuator availability

Direct

		IQ (3-Phase) Min	IQ (3-Phase) Max	IQS (1-Phase) Min	IQS (1-Phase) Max	IQD (DC) Min	IQD (DC) Max	IQM (3-Phase) Min	IQM (3-Phase) Max
Torque	Nm	14	3,000	10	450	11	305	11	544
	lbf.ft	10	2,200	7	332	8	225	8	400
Thrust	kN	44	445	44	150	44	100	44	150
	lbf	10,000	100,000	10,000	33,750	10,000	22,480	10,000	33,750
Class/starts-hour		A & B / 60		A & B / 60		A & B / 60		C / 1,200	

With IB gearbox

		IQ (3-Phase) Min	IQ (3-Phase) Max	IQS (1-Phase) Min	IQS (1-Phase) Max	IQD (DC) Min	IQD (DC) Max	IQM (3-Phase) Min	IQM (3-Phase) Max
Torque	Nm	12	7,604	9	3,060	10	2,074	10	3,686
	lbf.ft	9	5,610	7	2,258	7	1,530	7	2,720
Thrust	kN	53	1,320	53	1,320	53	1,320	53	1,320
	lbf	12,000	296,750	12,000	296,750	12,000	296,750	12,000	296,750
Class/starts-hour		A & B / 60		A & B / 60		A & B / 60		C / 1,200	

With IS gearbox

		IQ (3-Phase) Min	IQ (3-Phase) Max	IQS (1-Phase) Min	IQS (1-Phase) Max	IQD (DC) Min	IQD (DC) Max	IQM (3-Phase) Min	IQM (3-Phase) Max
Torque	Nm	15	40,718	11	9,756	12	6,612	12	11,750
	lbf.ft	11	30,030	8	7,200	9	4,878	9	8,672
Thrust	kN	53	2,900	53	2,900	53	2,900	53	2,900
	lbf	12,000	651,946	12,000	651,946	12,000	651,946	12,000	651,946
Class/starts-hour		A & B / 60		A & B / 60		A & B / 60		C / 1,200	

Direct - control valve

		IQTF (A coupling*) Min	IQTF (A coupling*) Max
Torque	Nm	20	250
	lbf.ft	15	185
Thrust	kN	44	100
	lbf	10,000	22,480
Class/starts-hour		C / 1,800	

For part-turn valve types

Actuator selection for part-turn valve types: Butterfly, ball, plug, damper.

Torque range - actuator availability

Direct

		IQT (3-Phase, 1-Phase)		IQT (DC)		IQTM (3-Phase, 1-Phase)		IQTM (DC)	
		Min	Max	Min	Max	Min	Max	Min	Max
Torque	Nm	50	3,000	50	2,000	50	3,000	50	2,000
	lbf.ft	37	2,214	37	1,476	37	2,214	37	1,476
Class/starts-hour		A & B / 60		A & B / 60		C / 1800		C / 1800	

With IW/MOW gearbox

		IQ (3-Phase)		IQS (1-Phase)		IQD (DC)		IQM (3-Phase)	
		Min	Max	Min	Max	Min	Max	Min	Max
Torque	Nm	204	826,888	150	208,000	162	131,950	162	76,964
	lbf.ft	150	609,880	111	153,400	119	97,500	119	56,800
Class/starts-hour		A & B / 60		A & B / 60		A & B / 60		C / 1,200	

Direct - control valve

		IQTF (B coupling)	
		Min	Max
Torque	Nm	20	3,000
	lbf.ft	15	2,214
Class/starts-hour		C / 1,800	

IQT Fail-to-position option

IQT, IQTM and IQTF actuators are compatible with the Shutdown Battery fail-to-position option. This is suitable for use in safe and hazardous areas. It performs a preconfigured action on loss of mains power to the actuator or allows continued operation of the actuator from remote or local commands until the battery charge is depleted.

Notes:

- Actual selection may be determined by power supply requirement - (refer to Section 7.1), valve stem dimensions and operating time.
- Class/starts refers to ISO 22153 duty types: A & B: isolating/regulating, C: modulating, D: continuous modulating.
- For the -20 °C build, charging can only take place if the ambient temperature is -10 °C or above. For the charging times, please refer to the IQT Safe Use Manual PUB002-065.

Simple, secure commissioning and configuration

Ensuring correct configuration and keeping it secure is the bedrock of reliable operation.

All IQ3 Perform actuators can be set up non-intrusively using the Rotork Bluetooth® Setting Tool *Pro* (BTST) handset or via manual setup using the actuator control knobs.

Torque levels, position limits, control and indication functions can all be accessed using any of these setting options. Bluetooth wireless connectivity with a BTST allows easy use without direct line-of-sight, however security has to match.

For the BTST, a secure connection is achieved by the initial 'pairing' of tool and actuator being carried out by a single infra-red transaction after which a Bluetooth wireless connection automatically takes over. Connection times out after two minutes of inactivity. Manual setup using the actuator control knobs allows access to on-screen menus and settings. Password entry is required to enable manual setup and it is automatically disabled after five minutes of inactivity. All configuration changes are password protected and the actuator is immune to connection by non-Rotork devices or applications.

IQ3 Perform range actuators benefit from an information-rich display, with a highly intuitive menu system for commissioning.

IQ3 Perform range actuators can be interrogated and set up, even when mains power is not available; the actuator can be configured and interrogated by using power from its display backup battery.

- Rapid and secure commissioning and configuration even without power via advanced HMI display
- Non-intrusive setting in any environmental conditions - no cover removal required, using the Rotork Bluetooth® Setting Tool *Pro* (BTST) handset or via manual setup using the actuator control knobs
- Easy installation and valve maintenance using detachable thrust bases
- Auto set-up function on part-turn variants

Technological advances

Position

Reliable valve position sensing is critical. Using the latest technology and after years of testing, the patented Rotork IQ absolute encoder is contactless, has only four active parts, can measure up to 8,000 output turns and has redundancy and self checking. The Rotork IQT redundant absolute encoder is contactless, has only one moving part and self-checking ability. Unlike existing absolute encoder designs, these technological breakthroughs increase position sensing reliability while providing zero-power position measurement.

Display

The advanced display allows large segment character position displays down to -50 °C. The large display is backlit to provide excellent contrast even in the brightest ambient light conditions and is protected by a toughened glass window.

Torque

IQ3 Perform utilises a torque sensor developed and used successfully by Rotork for over 20 years. Torque generated when moving the valve produces a proportional thrust reaction on the motor worm-shaft. This thrust creates pressure in the piezo torque transducer which converts it to a voltage signal directly proportional to the output torque being produced by the actuator. The signal is used by the control circuit for torque limiting, real-time torque indication and for recording valve operating force profiles in the data logger. IQ torque sensing is simple, accurate and extremely reliable over the life of the actuator. Unlike other systems employed, IQ torque measurement has the advantage of being independent of voltage and temperature variations.

Control

Control elements such as main control and network interface cards, are connected using an internal bus system based on CAN, reducing wiring and connections for increased reliability.

Future-proofing

IQ3 Perform actuators have been designed with future advances in mind. In addition to highly configurable setup options they also feature flexible design technology.

Using the Rotork Bluetooth® Setting Tool *Pro* (BTST) together with Rotork Insight 2 software, it is possible to apply updates to each actuator. This procedure is subject to four layers of security, with the option of disabling the BTST Bluetooth communication for maximum security.

Unrivalled industry-leading reliability

Valve operation must be reliable. Rotork IQ3 Perform range actuators are engineered for a lifetime of uninterrupted service in the toughest applications. Built on the Rotork drive train, proven since 1957, IQ3 Perform range actuators retain industry leading reliability:

- Advanced absolute position measurement allowing continuous position tracking even without power
- On power loss, remote indication is maintained
- Extended life and mounting in any orientation with oil bath lubrication
- Water and dust ingress protection, not reliant on the terminal cover or cable gland sealing - double-sealed to IP66/68 at 7 m for 72 hours
- Increased protection by using independent torque and position sensing
- Safe, motor-independent handwheel operation available at all times
- Drive bush bearings sealed for life - no maintenance required
- Backed by Rotork Service

Asset management

Entire operations can be performed in minutes and data logs can be downloaded to the Rotork Bluetooth® Setting Tool *Pro*, then transferred to a PC and analysed using Rotork Insight 2 software or uploaded to Rotork's intelligent Asset Management (iAM) system.

- Safe and secure data download via non-intrusive and intrinsically safe setting tool
- Field upgradeable and configurable control and indication options
- Compatible with *Pakscan* digital control and monitoring system plus all leading fieldbus networks
- Detailed trend analysis, diagnostics and data logger available downloadable via Bluetooth

Optimised for preventative maintenance

All IQ3 Perform actuators incorporate a sophisticated data logger, which can provide comprehensive data capture and analysis for planned maintenance and troubleshooting issues with valves and processes. They capture:

- Valve torque profiles
- Operational starts profiles
- Operational, vibration and temperature trend logs
- Event log

Asset management data regarding the actuator and the valve is stored within the actuator and available for download. Specific asset management information includes:

- Running time
- Average torque
- Starts
- Life statistics

IQ3 Perform actuators include configurable service/ maintenance alarms. The alarm parameters are:

- Open torque levels
- Close torque levels
- Starts/hr
- Total starts
- Total turns
- Service intervals

Innovative design features

Indication power

With the absolute encoder, a battery is not required for position sensing and tracking. As all configuration and data logger data is stored in non-volatile EEPROM memory, all settings are safe when no power is available. However, to maintain the display and ensure remote indication is kept updated, allow datalogging and power off commissioning, an indication battery is included as standard. Reduced power consumption means the battery has an exceptionally long life and low-cost replacements are available from suppliers globally. In addition, the auxiliary power module option is available, allowing the user to connect a 24 Volt supply to the actuator, should communication with network systems be required when main actuator power is switched off.

Safe manual operation

In case of an emergency, power outage or failure of the control network, IQ3 Perform actuators can be operated by hand. A manual clutch and handwheel allow an operator to disengage the motor and operate the valve independently, without risk of damage or injury.

Where the location requires it, the clutch can be padlocked into position to prevent accidental or unauthorised manual operation.

Manual movements of the valve are recorded and logged by the actuator. Position sensing in Rotork IQ3 Perform actuators is highly reliable (power on or off) thanks to the unique robust and simple design of the absolute encoder.

Network system connectivity

With the addition of an appropriate option card, the IQ3 Perform actuator can be incorporated into a number of different fieldbus control systems. IQ3 Perform actuators can be utilised within the Rotork *Pakscan*™ control system and the major open Fieldbus protocols including Profibus®, DeviceNet®, Foundation Fieldbus®, Modbus® and HART®.

Mechanical position indication

IQ actuators can be installed in combination with a mechanical position indicator to show valve position. The mechanical position indicator comprises only mechanical parts with proven Rotork reliable design.

Refer to PUB002-137 *for further details.*

Backup power solution

IQT actuators can include an integral battery to perform a fail-to-position operation, should mains power loss occur. The operating action is fully-configurable to accommodate site shutdown processes.

The Shutdown Battery option comprises an integral Lithium Ion battery suitable for use in safe and hazardous environments.

Vibration measurement

Vibration can severely affect the performance and lifetime of plant equipment and its effects are cumulative. Levels of vibration can vary significantly, depending on process conditions such as start up and shut down, valve cavitation and at different flow rates, making it difficult to capture with mobile measuring devices.

The IQ3 Perform actuator includes a vibration sensor that measures and captures vibration levels in the range of 10 Hz to 1 kHz (RMS average) and peak acceleration (maximum g) in three axes (x, y and z). Vibration trend logs can be viewed on the actuator display, downloaded and viewed using Insight 2 PC software or uploaded and viewed on Rotork's intelligent Asset Management (iAM) system.

Plug and socket

IQ range actuators can be supplied with a fully engineered plug and socket interface to provide fast connection and disconnection in the field. Plug and socket facilitates field wiring in advance to improve commissioning speed and efficiency.

The IQ plug and socket option maintains the IP68 rating (7 m for 72 hours) and is certified for use in hazardous areas.

Refer to PUB002-127 for further details.

Intelligent systems for safe operation

IQ thermostatic protection

In the event of overheating, two thermostats embedded in the motor windings directly sense the temperature and trip the actuator control circuit.

Auto Self Test and Diagnosis (ASTD)

Vital operational circuits automatically self-test to ensure correct operation. In the unlikely event that a fault is diagnosed, the information is automatically presented on the display. At the same time, actuator operation can be inhibited to enable on-site investigation.

Instant reversal protection

When an actuator is ordered to reverse direction 'instantaneously' an automatic time-delay circuit avoids the shock loads which may cause unnecessary wear to valve stems and gearboxes. The delay also limits current surges through the contactor.

Syncrophase - incorrect wiring protection

Rotork's Syncrophase™ automatic phase rotation correction prevents valve damage caused by incorrect wiring by ensuring that the IQ 3-phase motor is always presented with the correct phase rotation. Syncrophase senses the incoming phase rotation then energises the appropriate contactor to cause movement in the correct direction.

Single phasing protection*

The IQ power module monitors all 3 phases of the power supply. Should one or more phases be lost, the control system inhibits operation, preventing motor 'single phasing' and burn-out. The actuator display will indicate 'phase lost', remote indication is also available from the configurable indication contacts.

** IQ 3-phase only.*

Valve jammed protection

The actuator faces its severest operating duty during unseating of the valve, when operating forces are at their highest or where an infrequently operated valve can get stuck. IQ has the intelligence to systematically cope with these demands, ensuring reliable valve operation together with valve and actuator protection.

If valve "sticking" is considered possible, as with a wedge gate type, the torque switches can be by-passed during a configurable portion of travel away from the valve seated position. This allows extra torque (known as breakout torque) up to 1.5 times rated to be applied in unseating the valve. In the majority of cases, applying additional force causes the sticky valve to move and allows operation to continue. After the breakout torque set position has been reached, the torque switch returns to the original set value for the rest of travel. If the breakout torque is still insufficient to cause movement, IQ recognises the valve is jammed and stops operation within seconds, preventing further valve damage or motor burn-out.

User interface and diagnostic tools

User-friendly setup menu

A single press of a button on the BTST takes you into the user-friendly setup menu. This menu has been designed and structured to reduce reliance on having a written manual to hand. With large, clear characters available, setup and configuration has never been so easy.

Remote diagnosis - Bluetooth

The BTST allows downloading of data logger and configuration files. Configuration and calibration data can also be uploaded from the BTST to the actuator.

File transfer and data exchange is made using Bluetooth wireless technology between the actuator, the BTST and a PC which then uploads the data to Rotork's intelligent Asset Management (iAM) system for analysis.

Lifetime support

With communication featuring Bluetooth wireless technology, the onboard data logger and the new dual-stacked display, the IQ range offers unrivalled support to provide complete product backup with local configuration. This is further supported up by the introduction of the new Insight 2 program, which allows the user full access to configuration and data analysis. With Rotork's unrivalled worldwide service, network expert advice is always close to hand.

Rotork help – Online

Rotork has a comprehensive worldwide service network to provide you with local support wherever you are.

Rotork trained technicians working from our network of offices and centres of excellence are available to offer immediate assistance.

To contact Rotork, visit www.rotork.com

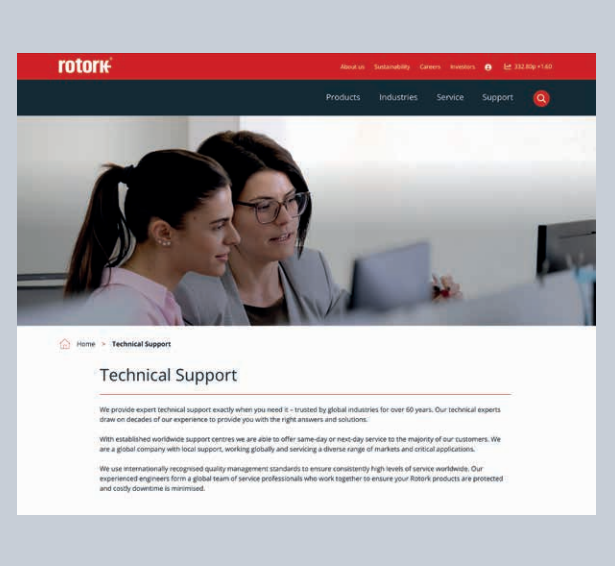

IQ3 Perform design features

PC tools - Insight 2

Rotork Insight 2 facilitates the review, configuration and analysis of setup configuration and data logger information for Bluetooth enabled Rotork actuators. The visually interactive application is intuitive with clear menus making it a simple and fast process.

All Bluetooth enabled Rotork actuators include an onboard data logger. The data logger captures and stores valve, actuator, control signal operation and status data which can be viewed on a PC using Insight 2.

Log data is time and date stamped and can be viewed on an event-by-event basis. Insight 2 enables the user to pre-configure actuator missions on a PC, transfer them to a BTST and transmit them to the actuator on-site. The missions can be dedicated to specific actuators by type or serial number and are password protected for extra security.

Standard missions include: extraction of actuator configuration and data logger, modification of actuator parameters and option configuration.

Password protection is available on the Insight 2 software and actuators to prevent unauthorised or accidental modification of actuator configuration parameters.

Insight 2 key features

- View and modify actuator specification and configuration on PC
- Valve and actuator starts against position log
- Valve reference profile trend logs
- Valve torque profile, open/closed instantaneous and average torque against valve position
- View and modify option card configuration
- Operation and actuator control status log
- Pre-configure missions on a PC and transfer them to actuators in the field via the BTST. Insight 2 requires a PC with a Bluetooth interface running Microsoft™ Windows XP or newer

Fieldbus Compatibility

IQ3 Perform actuators are compatible with most industry standard fieldbus systems as well as Rotork's own *Pakscan* system.

- Compatibility via network cards that are fitted in the main electronics enclosure
- Full integration with your existing plant control systems

Pakscan™

Modbus®

FOUNDATION

HART COMMUNICATION PROTOCOL

PROFIBUS

DeviceNet CONFORMANCE TESTED

Rotork Master Station - Network Capabilities

Redundant Host Ethernet Modbus TCP connection as standard with optional redundant Host serial Modbus RTU connection available.

Pakscan Classic field network Add In Module (AIM)

The *Pakscan* Classic redundant loop network has been the network of choice for actuator control for over 30 years. Using robust current loop technology, up to 20 km loop lengths, two independent loops and 240 field devices are possible.

Modbus field network Add In Module (AIM)

Modbus field network with standard highway or redundant loop topology options. Other manufacturers' devices are integrated into the network by use of a Rotork field device description file.

The following pages contain details on performance and specification for the IQ3 Perform range of actuators.

Please use the following table of contents to help access the information you require.

Section	Title	Page
1	Performance Summaries	17
2	Actuator Drive Couplings	22
Standard Specifications		**24**
3	Introduction	24
4	Design specification	24
4.1	Duty rating	25
4.2	Design life (endurance)	25
4.3	Vibration, shock and noise	26
4.4	Valve / actuator interface	26
4.5	Operating temperature	27
5	Non-hazardous & hazardous certified enclosures	28
5.1	Non-hazardous area enclosures	28
6	Regulatory standards	29
7	Power, control & indication	30
7.1	Power supplies	30
7.2	HMI, local control, indication & set-up	31
7.2.1	User-friendly setup menus	32
7.3	Remote control & indication	33
7.4	Fieldbus system control options	35
8	Protection and operating features	36
9	Components	38
9.1	Handwheel	38
9.2	Drive train	39
9.3	Corrosion protection	39
9.4	Motor	40
9.5	Power module	41
9.6	Torque sensor	41
9.7	Position sensor	41
9.7.1	Mechanical position indication	41
9.8	Control and User Interface (UI) modules	42
9.9	Conduit / cable Entries	43
9.10	Terminals	43
9.11	Wiring	43
9.12	Battery	43

1 Performance summaries

IQ - performance data

	Actuator output speeds							
rpm at 50 Hz rpm at 60 Hz	18 21	24 29	36 43	48 57	72 86	96 115	144 173	192 230
Actuator size	Torque[3] Nm		lbf.ft					
IQ10	34	34	34	34	34	34		
	25	25	25	25	25	25		
IQ12	81	81	81	68	47	41		
	60	60	60	50	35	30		
IQ18	108	108	89[1]	80[1]	69[1]	60[1]	49[1]	39[1]
	80	80	66[1]	59[1]	51[1]	44[1]	36[1]	29[1]
IQ19	136	136	136	136	136			
	100	100	100	100	100			
IQ20	203	203	203	203	176	142	102[2]	
	150	150	150	150	130	105	75[2]	
IQ25	400	400	298	244	244	230	149[2]	140[1]
	295	295	220	180	180	170	110[2]	103[1]
IQ35	610	610	542	475	475	366	258[2]	258[1]
	450	450	400	350	350	270	190[2]	190[1]
IQ40	1,017	1,017	847	678	678	542	407[2]	
	750	750	625	500	500	400	300[2]	
IQ70	1,491	1,491	1,288	1,017	1,017	746	644[2]	542[2]
	1,100	1,100	950	750	750	550	475[2]	400[2]
IQ90	2,034	2,034	1,695	1,356	1,356	1,017	868[2]	732[2]
	1,500	1,500	1,250	1,000	1,000	750	640[2]	540[2]
IQ91							1,356[2]	1,356[2]
							1,000[2]	1,000[2]
IQ95		2,983						
		2,200						

Notes:

1 Please see Section 7.1 for power supply availability.

2 Due to the effects of inertia and drive nut wear, speeds are not recommended for direct mounted gate valve applications.

3 Torque rating is maximum torque setting in both directions. Stall torque will be 1.4 to 2.0 times this value depending on speed and voltage.

Performance data above also applies to SET feature.

If maximum torque is required for more than 20% of valve travel, refer to Rotork.

Performance Summary

IQS - performance data

Actuator output speeds

rpm at 50 Hz rpm at 60 Hz	18 21	24 29	36 43	48 57	72 86	96 115	144 173
Actuator size	Torque[2] Nm / lbf.ft						
IQS12	65	60	45	41	30	24	
	48	44	33	30	22	18	
IQS20	165	130	130	125	100	80	60[1]
	122	96	96	92	74	59	44[1]
IQS35[3]	450	400	350	320	230	190	136[1]
	332	295	258	236	170	140	100[1]

IQD - Performance data

Actuator output speeds

rpm	18	24	36	48
Actuator size	Torque[2] Nm / lbf.ft			
IQD10	34	34	31	27
	25	25	23	20
IQD12	68	68	61	54
	50	50	45	40
IQD18		108		
		80		
IQD20	163	163	136	108
	120	120	100	80
IQD25	305	305	258	203
	225	225	190	150

DC supply voltage

	24 V	110 V
IQD10	✔	✔
IQD12	✗	✔
IQD18	✗	✔
IQD20	✗	✔
IQD25	✗	✔

IQM - performance data

Actuator output speeds

rpm at 50 Hz rpm at 60 Hz	18 21	24 29	36 43	48 57	72 86
Actuator size	Torque[2] Nm / lbf.ft				Seating (modulating)
IQM10	34 (17)	34 (17)	31 (16)	27 (14)	-
	25 (12.5)	25 (12.5)	23 (11.5)	20 (10)	-
IQM12	61 (34)	54 (34)	54 (30)	47 (27)	-
	45 (25)	40 (25)	40 (22)	35 (20)	-
IQM20	122 (81)	108 (81)	81 (68)	68 (54)	54 (47)
	90 (60)	80 (60)	60 (50)	50 (40)	40 (35)
IQM25	203 (153)	203 (153)	163 (129)	136 (102)	136 (102)
	150 (112.5)	150 (112.5)	120 (95)	100 (75)	100 (75)
IQM35	542 (271)	542 (271)	407 (254)	312 (203)	217 (203)
	400 (200)	400 (200)	300 (187)	230 (150)	160 (150)

Notes:

1 Actuator output speed 144/173 rpm is not recommended for direct mounted gate valve applications.

2 Torque rating is maximum torque setting in both directions. Stall torque will be 1.4 to 2.0 times this value depending on speed and voltage.

3 IQS35 not available at 115 Volts.

If maximum torque is required for more than 20% of valve travel, refer to Rotork.

IQ, IQS, IQD, IQM - mechanical data

Actuator size IQ, IQS, IQD, IQM, IQL		10 12 18	19 20 25	35	40 70 (90)[1]	(40)[1] (70)[1] 90	91	95
Approximate weight[2]	kg	31	54	75	145	160	150	160
	lbs	68	119	165	320	353	331	353

Type A couplings - torque and thrust: IQ, IQS, IQD, IQM

Flange size	ISO 5210	F10	F14	F16	F25	F30	F25	F30
	MSS SP-102	FA10	FA14	FA16	FA25	FA30	FA25	FA30
Thrust rating	kN	44	100	150	220	445	N/A	445
	lbf	10,000	22,480	33,750	50,000	100,000	N/A	100,000
Stem acceptance								
A (Z3)[3] **rising**	mm	32	51	67	73	83	N/A	83
	in	1.25	2	2.64	2.87	3.27	N/A	3.27
A (Z3)[3] **non-rising**	mm	26	38	51	57	73	N/A	73
	in	1	1.5	2	2.25	2.87	N/A	2.87
Pilot bore[4]	mm	15	20	25	33	38	N/A	38
	in	0.6	0.8	1	1.3	1.5	N/A	1.5

Type B couplings - torque only: IQ, IQS, IQD, IQM

Flange size	ISO 5210	F10	F14	F16	F25	F30	F25	F30
	MSS SP-102	FA10	FA14	FA16	FA25	FA30	FA25	FA30
Stem acceptance								
B1 fixed bore	mm	42	60	80	100	120	100	N/A
	in	1.65	2.36	3.15	3.94	4.72	3.94	N/A
B3 fixed bore	mm	20	30	40	50	50	50	N/A
	in	0.79	1.18	1.57	1.97	1.97	1.97	N/A
B4 (maximum)	mm	20	32	44	60	60	60	N/A
	in	0.79	1.26	1.73	2.36	2.36	2.36	N/A

Handwheels: IQ, IQS, IQD, IQM

Actuator size	10, 12, 18	19, 20	25	35	40	70, 90, 91	95
Standard ratio	1:1	1:1	13.3:1[5]	22.25:1	15:1	30:1	45:1
Option ratio	5:1	13.3:1	1:1[6]	N/A	30:1	45:1	30:1[6]

Notes:

1 IQ40 and IQ70 have an F25/FA25 base fitted as standard. F30/FA30 can be fitted as an option. IQ90 B3 and B4 couplings are only available with F25/FA25. IQ90 A coupling is only available with F30/FA30.
2 Approximate net weights of standard build actuators. Actual weight will be dependent on specification and options fitted.
3 Rotork standard "Z3" option is extended below baseline allowing additional reach. Refer to Section 2.
4 Solid coupling option available on request.
5 IQM25 standard ratio is 1:1 and option ratio is 13.3:1.
6 Rimpull does not meet the requirements of EN12570. May be used for lower torque applications or where higher handwheel forces are acceptable.

IQT, IQTM and IQTF - performance data

Actuator	IQTF50	IQTF100	IQT125 IQTF125 IQTM125	IQT250 IQTF250 IQTM250	IQT500 IQTF500 IQTM500	IQT1000 IQTF1000 IQTM1000	IQT2000 IQTF2000 IQTM2000	IQT3000 IQTF3000 IQTM3000
Seating torque		Torque	Nm	lbf.ft				
	50	100	125	250	500	1,000	2,000	3,000
	37	74	92	185	369	738	1,476	2,214
Modulating torque - IQTM and IQTF only								
	25	50	63	125	250	500	1,000	1,000
	19	37	46	93	185	369	738	738
Operating time (seconds) - IQT and IQTM only								
90° Min	–	–	5	8	15	30	60	60
90° Max	–	–	20	32	60	120	240	120
Operating speed - IQTF only								
rpm (standard)	2.5 - 10	1.5 - 6	0.8 - 3	0.5 - 1.88	0.25 - 1	0.125 - 0.5	0.125 - 0.25	0.125 - 0.25
rpm (DC extended speed)	2.6 - 13	1.8 - 9	0.8 - 4	–	–	–	–	–
rpm (AC extended speed)	3.2 - 16	2.4 - 12	1 - 5	–	–	–	–	–
max turns, min rpm	22	22	12	7.5	3.75	1.88	1.88	1.88
max turns, max rpm	22	22	22	22	15	8	4	4

IQT/IQTM/IQTF actuator output torque is configurable to 40 - 100% of seating torque.
Operating speed of IQT/IQTM/IQTF 24 VDC actuators will vary with load.

IQT, IQTM and IQTF - mechanical data

Actuator	IQTF50	IQTF100	IQT125 IQTF125 IQTM125	IQT250 IQTF250 IQTM250	IQT500 IQTF500 IQTM500	IQT1000 IQTF1000 IQTM1000	IQT2000 IQTF2000 IQTM2000	IQT3000 IQTF3000 IQTM3000
Approximate weight								
kg	22	22	22	22	22	37	37	39
lbs	49	49	49	49	49	82	82	86
Handwheel details								
Turns for 90°	26	26	88	88	88	83	83	83

Type B coupling - torque only

ISO5211	F05*	F07*	F10	F05*	F07*	F10	F05*	F07*	F10	F07*	F10	F10	F12	F14	F14	F16
MSS SP-101	FA05*	FA07*	FA10	FA05*	FA07*	FA10	FA05*	FA07*	FA10	FA07*	FA10	FA10	FA12	FA14	FA14	FA16
Bore & key max mm	22	28	42	22	28	42	22	28	42	28	42	42	60		60	60
Bore & key max in	0.87	1.1	1.65	0.87	1.1	1.65	0.87	1.1	1.65	1.1	1.65	1.65	2.36		2.36	2.36
Square AF max mm	14	19	32	14	19	32	14	19	32	19	32	32	41		41	46
Square AF max in	0.56	0.75	1.25	0.56	0.75	1.25	0.56	0.75	1.25	0.75	1.25	1.25	1.62		1.62	1.81
Shaft height max mm	65	65	45	65	65	45	65	65	45	65	45	45	65		65	80
Shaft height max in	2.56	2.56	1.77	2.56	2.56	1.77	2.56	2.56	1.77	2.56	1.77	1.77	2.56		2.56	3.15

* Optional flanges F05, FA05, F07 and FA07 use a base adapter plate. Required base type must be specified.

Type A coupling - torque and thrust

ISO 5210	F10	F10	F14	F14	-	-	-	-
MSS SP-101	FA10	FA10	FA14	FA14	-	-	-	-
Thrust rating kN	44	44	100	100	-	-	-	-
Thrust rating lbf	10,000	10,000	22,480	22,480	-	-	-	-
Max rising stem diameter mm	32	32	44	44	-	-	-	-
Max rising stem diameter in	1.25	1.25	1.7	1.7	-	-	-	-
Extra weight kg	10	10	25	25	-	-	-	-
Extra weight lbs	22	22	55	55	-	-	-	-

2 Actuator drive couplings

2.1 IQ and IQT drive couplings

The IQ3 Perform range features a removable base and coupling for all sizes. Flanges and couplings comply with ISO 5210 or MSS SP-102. Other base interfaces are available – apply to Rotork for details.

Drive couplings

The removable drive bushes are supplied blank or pilot-bored for machining to suit the valve stem.

Thrust bearings

Type 'A' and 'Z3' couplings include a fully-sealed and lubricated-for-life thrust bearing. The thrust bases are designed to retain all the developed valve thrust reaction forces without any thrust load being transmitted to the actuator gearcase.

2.2 Thrust (temperature) compensation - coupling T

For applications when valve stem expansion (caused by temperature change), within the valve body, can generate excess thrust and cause the valve to become damaged, Rotork offer a thrust compensator. This limits thrust and prevents damage, while maintaining a sufficient level to prevent leaking.

F10 type A thrust base assembly.

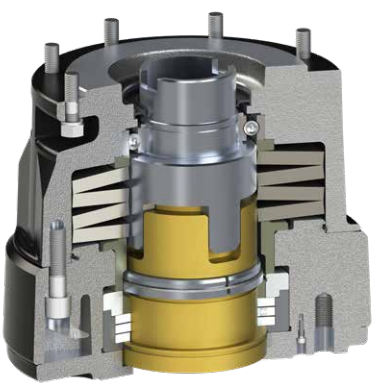

Thrust compensator.

F14 and F16 type A thrust base assembly.

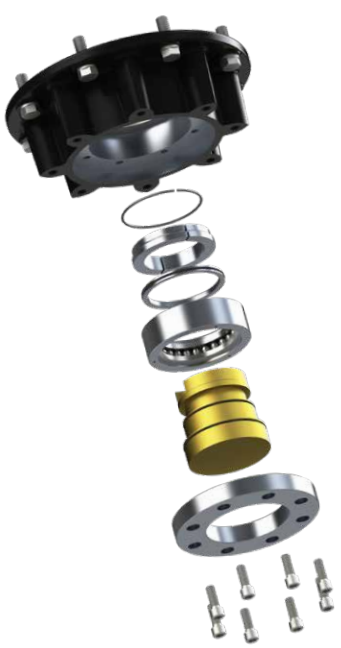

F25 and F30 type A thrust base assembly.

IQ Actuator drive couplings

All size IQ3 Perform actuators

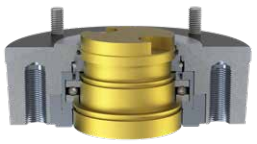

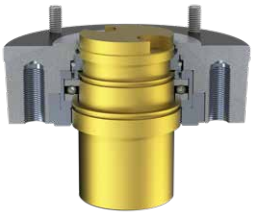

Thrust	**Type A**		**Type Z3** Increased reach
Non-thrust	Large fixed bore with ISO standard bore and keyway **Type B1**	Fixed bore with ISO standard bore and keyway **Type B3**	Blank drive bush for machining by customer **Type B4**

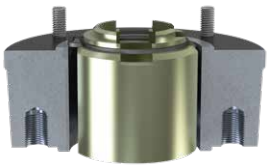

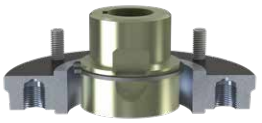

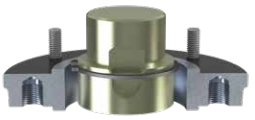

IQT actuator drive couplings

All size IQT3 Perform actuators

Thrust	**Type A**	
Non-thrust	**Type B**	
	F05/FA05 and **F07/FA07**	**F10/FA10**

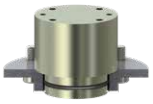

3 Introduction

IQ3 Perform range actuators are self-contained, purpose-designed and built for the local and remote electrical operation of valves. Comprising an electric motor, reduction gearing, reversing starter with local controls and indication, turns and torque limitation with electronic logic controls and monitoring facilities housed in a double-sealed watertight enclosure.

All torque, turns settings and configuration of the indication contacts are made using one of the non-intrusive setting options.

The specifications in this section cover IQ3 Perform range standard and optional features. Enclosure requirements and selected build options must be specified at time of enquiry.

4 Design specification

The IQ3 Perform range of actuators comply, where applicable, with the following International, European and USA standards.

Standard	Title
ISO 22153	Electric actuators for industrial valves – General requirements
ISO 22109	Industrial valves – Gearboxes for valves
ISO 5210	Industrial valves – Multi-turn valve actuator attachments
ISO 5211	Industrial valves – Part-turn valve actuator attachments
ISO 12490	Petroleum and natural gas industries – Mechanical integrity and sizing of actuators and mounting kits for pipeline valves
EN 12570	Industrial valves. Method for sizing the operating element
API 6DX	Standard for Actuators and Mounting Kits for Valves
ANSI/ISA SP96.02	Guidelines for the Specification of Electric Valve Actuators
MSS SP-102	Multi-Turn Valve Actuator Attachment – Flange and Driving Component Dimensions and Performance Characteristics.
MSS SP-101	Part-Turn Valve Actuator Attachment – Flange and Driving Component Dimensions and Performance Characteristics
AWWA C542	Electric motor actuators for valves and slide gates

4.1 Duty rating

The below table provides duty ratings for IQ3 Perform range multi-turn, part-turn and linear output actuators.

ISO 22153 duty requirements were developed specifically for electric valve actuators and define load, cycle and start requirements. Duty performances vary with torque and thrust. When actuator operating performance increases, the required duty decreases, reflecting the operational requirements of valves.

The referenced "S" duties, in accordance with IEC 60034-1 (Rotating electrical machines – duty and performance), do not accurately reflect variable valve operating load profiles imposed on actuators. As such IEC 60034-1 is not directly comparable and is included for information only.

Actuator type [1]	Duty class (ISO 22153)	Rotork duty rating [2]
IQ / IQS / IQD	A, B (on-off – inching)	15 minutes (S2-15 min / S3 25%) based on 60 starts per hour at a rate of up to 600 starts per hour [3]
IQ	C (modulating)	360 starts per hour (S4-30%) [3]
IQM	C (modulating)	1,200 starts per hour (S4-50%) [3]
IQT	A, B (on-off – inching)	60 cycles / 120 starts per hour at rate of up to 600 starts per hour (S2-15 min / S3 25%) [3]
IQT	C (modulating)	1,200 starts per hour (S4-50%) [4]
IQTM / IQTF	C (modulating)	1,800 starts per hour (S4-50%)

Notes:
1 Duty achieved by actuators with performances referenced in Section 1.
2 ISO 22153 defines duty load, cycle and start requirements.
3 Availability subject to model, torque, speed and voltage limitations. Other duties are available subject to torque and thrust requirement. Apply to Rotork.
4 When controlled by analogue or network positioning signal.

4.2 Design life (endurance)

IQ3 Perform range actuators meet or exceed the endurance requirements of ISO 22153. The table below details the IQ3 Perform range design qualification endurance tests.

IQ output type [1]	Duty class (ISO 22153)	Torque / thrust	Rotork endurance test [2]
Multi-turn	A, B (isolating - inching)	≤700 Nm (516 lbf.ft)	10,000 cycles (500,000 output turns) / 33% rated torque
		701 - 3,000 Nm (517 - 2,212 lbf.ft)	5,000 cycles (250,000 output turns) / 33% rated torque
	C (modulating)	IQ ≤400 Nm (295 lbf.ft)	1,800,000 starts / 33% rated torque
	C (modulating)	IQM ≤544 Nm (401 lbf.ft)	1,800,000 starts / 50% rated torque
Part-turn	A, B (isolating - inching)	≤2,000 Nm (1,475 lbf.ft)	25,000 cycles / 75% rated torque
		3,000 Nm (2,212 lbf.ft)	10,000 cycles / 50% rated torque
	C (modulating)	≤2,000 Nm (1,475 lbf.ft)	1,800,000 starts / 50% rated torque
		3,000 Nm (2,212 lbf.ft)	1,800,000 starts / 33% rated torque

Notes:
1 Endurance achieved by actuators with performances referenced in Section 1.
2 ISO 22153 defines endurance load, cycle and start requirements.

4.3 Vibration, shock and noise

Standard IQ3 Perform range actuators are suitable for applications where vibration and shock severity does not exceed the following:

Type	Level
Plant induced vibration	1g RMS total for all vibration within the frequency range of 10 to 1,000 Hz
Shock	5g peak acceleration
Seismic	2g acceleration over a frequency range of 1 to 50 Hz if it is to operate during and after the event
Emitted noise	Independent tests have shown that at 1m generated noise does not exceed 65 db (A)

Levels quoted are those present at the actuator mounting interface. It should be noted that the effects of vibration are cumulative and therefore an actuator subjected to significant levels may have a reduced lifespan. Where excessive plant-induced vibration is anticipated, mounting the actuator remote from the valve and driving via extension shafting (incorporating vibration absorbing couplings) may provide a satisfactory solution.

The IQ3 Perform includes a vibration sensor that measures and captures vibration levels in the range of 10 Hz to 1 kHz (RMS average) and peak acceleration (maximum g) in 3 axes (x, y and z). Vibration trend logs averaged over one hour can be downloaded and viewed using Insight 2 or uploaded to Rotork's intelligent Asset Management (iAM) system for analysis.

4.4 Valve / actuator interface

The IQ3 Perform range of actuators are available with mounting base and output drive couplings conforming to the following international standards:

Valve to actuator interface:

Valve type	Actuator range	Area	Standard	Code
Multi-turn	IQ	International	ISO 5210	“F” metric
Multi-turn	IQ	USA	MSS SP-102	“FA” imperial
Part-turn	IQ + ¼ turn gearbox	International	ISO 5211	“F” metric
Part-turn	IQ + ¼ turn gearbox	USA	MSS SP-101	“FA” imperial
Part-turn	IQT	International	ISO 5211	“F” metric
Part-turn	IQT	USA	MSS SP-101	“FA” imperial

Actuator orientation:

Actuators can be mounted in any orientation. The user/installer is responsible for considering the effects of orientation and subsequent loading on the supporting pipework and valve structure including any interface adaption kits.

4.5 Operating temperature

Actuators are suitable for operation within the ambient temperature ranges shown below. Refer to Section 5 for hazardous area certification operating temperature restrictions. For temperatures outside this range please contact Rotork. Prior to installation actuators should be stored in a dry location with a temperature range not exceeding -60 to 80 °C (-76 to 176 °F).

Actuator type	Standard temperature[1]	Low temperature option[1]
IQ, IQM	-30 to +70 °C (-22 to +158 °F)	Refer to Section 5
IQS	-20 to +70 °C (-4 to +158 °F)	Option 1: -30 to +70 °C (-22 to +158 °F) Option 2: -40 to +70 °C (-40 to +158 °F)
IQD	-20 to +70 °C (-4 to +158 °F)	Not available
IQT / IQTM / IQTF	-30 to +70 °C (-22 to +158 °F)	-50 to +40 °C (-58 to +104 °F)[2]

Notes:
1 Hazardous area certification determines permissible operating temperature range. Refer to Section 5.
2 Low temperature option is not available for IQTF50 and IQTF100.

5 Non-hazardous & hazardous certified enclosures

All IQ3 Perform actuator hazardous and non-hazardous area enclosures are watertight to IP68/NEMA Types 4 & 6. The Rotork double-sealed terminal compartment features a seal at the terminal cover and a separate seal at the terminal bung. This results in the actuator internals being completely sealed from the environment for life, even with the terminal cover removed.

Through the use of non-intrusive commissioning and adjustment using the Rotork Bluetooth® Setting Tool *Pro* (BTST) or manual setup via the local control knobs, covers never need removing and therefore the hermetic, factory-sealed enclosure protects internal components for life.

In addition, the BTST is certified Intrinsically Safe (IS), permitting power-on commissioning in hazardous areas.

Actuators are available with the following enclosure types for which the ambient working temperature ranges are stated. Where option temperatures are indicated, changes to some actuator components are required and therefore the temperature requirement must be specified.

IQ3 Perform actuators are available built in accordance with the following standards:

5.1 Non-hazardous area enclosures

WT: Standard watertight

Standard	Rating	Standard temperature	Option 1	Option 2
IEC 60529 (1989-11)	IP66/IP68-7 m / 72 hours	-30 to +70 °C	-40 to +70 °C	-50 to +40 °C
BS EN 60529 (1992)	IP66/IP68-7 m / 72 hours	-30 to +70 °C	-40 to +70 °C	-50 to +40 °C
NEMA (US)	Type 4, 4X & 6	-22 to +158 °F	-40 to +158 °F	-50 to +104 °F
CSA (Canadian)	Type 4, 4X & 6	-22 to +158 °F	-40 to +158 °F	-50 to +104 °F
EAC (Kazakhstan)	IP66/IP68-7 m / 72 hours	-30 to +70 °C	-40 to +70 °C	-50 to +40 °C

Rotork Bluetooth® Setting Tool *Pro* certification

Directive / standard	Rating	Standard temperature
ATEX II 1G	**Ex ia IIC T4**	-30 to +50 °C (-22 to +122 °F)
FM3610	**Intrinsically Safe Class I, Div 1 groups A,B,C,D: T4**	-30 to +50 °C (-22 to +122 °F)
Canada CSA – C22.2 No.157-92	**Exia - Intrinsically Safe Class I, Div 1 groups A,B,C,D: T4**	-30 to +50 °C (-22 to +122 °F)

6 Regulatory standards

Compliance with the following European Community (EC) and UK Statutory Instruments (SI) Directives permits IQ range actuators to be CE marked under the provision of the Machinery Directive.

Directive	Applicable to	Reference
Electromagnetic compatibility (EMC)	**Immunity to / emissions of electromagnetic energy**	Directive 2014/30/EU and SI 2016 No. 1091
Electrical Safety (LVD)	**Electrical safety**	Directive 2014/35/EU and SI 2016 No. 1101
Machinery (Safety)[1]	**Product safety**	Actuators follow the provision of the Machinery Directive 2006/42/EC and SI 2008 No. 1597. The IQ must not be put into service until the equipment into which it is being incorporated has been declared to be in conformity with the provisions of the European Community Machinery Directive 2006/42/EC and SI 2008 No. 1597.
Radio Equipment	**Bluetooth modules - actuator and Rotork Bluetooth® Setting Tool *Pro***	Directive 2014/53/EU and SI 2017 No. 1206
Waste Electrical Equipment (WEE)	**Exempt under the scope of the directive**	
Federal Communications Commission	**Bluetooth modules - actuator and Rotork Bluetooth® Setting Tool *Pro***	Contains FCC certified transmitter module.

Note:

1 Actuators are not classified as machines within the scope of the machinery directive. Contact Rotork for a copy of our Declaration of Conformity and Incorporation.

7 Power, control & indication

7.1 Power supplies

IQ3 Perform actuators are suitable for operation with the following 1-phase, 3-phase and DC power supplies:

Standard supply voltage ranges – actuator availability

IQ actuator – 3-phase

Actuator size	10	12	18	19	20	25	35	40	70	90	91	95
rpm	Voltage availability											
18	A	A	A	A	A	A	A	C	C	C	–	–
24	A	A	A	A	A	A	A	C	C	C	–	C
36	A	A	B	A	A	A	A	C	C	C	–	–
48	A	A	B	A	A	A	A	C	C	C	–	–
72	A	A	B	A	A	A	A	C	C	C	–	–
96	A	A	B	–	A	A	A	C	C	C	–	–
144	–	–	B	–	A	A	A	C	C	C	C	–
192	–	–	B	–	–	B	B	–	C	C	C	–

Group A **50 Hz:** 190, 415, 500 V. **60 Hz:** 230, 460, 600 V. **50/60 Hz:** 200, 208, 220, 240, 380, 400, 440, 480, 575, 660, 690 V
Group B **50 Hz:** 380, 400, 415, 440 V. **60 Hz:** 460, 480 V
Group C **50 Hz:** 380, 400, 415, 440, 500, 660, 690 V. **60 Hz:** 480, 600 V

Additional voltages are available for specific speeds and/or duty, refer to PUB002-099 or contact Rotork for more information.

IQM, IQML actuators – 3-phase

Actuator size	10	12	20	25	35
rpm	Voltage availability				
18	A	A	A	A	B
24	A	A	A	A	B
36	A	A	A	A	B
48	A	A	A	A	B
72	–	–	A	A	B

Group A **50 Hz:** 190, 415 V. **60 Hz:** 230, 460 V.
50/60 Hz: 200, 208, 220, 240, 380, 400, 440, 480 V
Group B **50 Hz:** 380, 400, 415 V. **60 Hz:** 440, 460, 480 V

Additional voltages are available for specific speeds and/or duty, refer to PUB002-120 or contact Rotork for more information.

IQS actuator – 1-phase

Actuator size	12	20	35
rpm	Voltage availability		
18	A	A	B
24	A	A	B
36	A	A	B
48	A	A	B
72	A	A	B
96	A	A	B
144	-	A	B

Group A **50/60 Hz:** 110, 115, 120, 220, 230, 240 V
Group B **50/60 Hz:** 220, 230, 240 V

Refer to PUB002-119 or contact Rotork for more information.

Note: Actuators for use on phase to phase voltages greater than 600 V must not be used on supply systems such as floating, or earth-phase systems, where phase to earth voltages, pertinent to mains supply system type and nominal voltage, in excess of 600 VAC may exist; reference BS EN IEC 61010 – Annex I.

IQD actuator – DC

Actuator size	10	12	18	20	25
rpm	Voltage availability				
18	A	B	-	C	C
24	A	B	B	C	C
36	A	B	-	C	C
48	A	B	-	C	C

Group A 24, 110 V
Group B 110 V
Group C 110 V

Refer to PUB002-121 or contact Rotork for more information.

Tolerances

Voltage tolerance	+/-10%	Applies to rated torque performance only; duty cycle and speed is not guaranteed
Frequency tolerance	+/-5%	Applies to rated torque performance only; duty cycle and speed is not guaranteed
Non-standard tolerances	For tolerances larger than those quoted, contact Rotork	
Uninterruptable power supplied	For AC systems the UPS output should conform to recognised supply standards such as BS EN 50160 in respect of waveform, harmonics etc.	

IQT, IQTM, IQTF actuators

Actuator size	50	100	125	250	500	1000	2000	3000
Voltage	Voltage availability							
DC – 24 V	✓	✓	✓	✓	✓	✓	✓	✗
1-Phase 50/60 Hz: 100, 110, 115, 120, 208, 220, 230, 240 V	✓	✓	✓	✓	✓	✓	✓	✓
3-Phase 50/60 Hz: 200, 208, 220, 230, 240, 380, 400, 415, 440, 460, 480, 500, 550, 575, 590, 600, 660, 690 V	✓	✓	✓	✓	✓	✓	✓	✓

Note: Actuators for use on phase to phase voltages greater than 500 V must not be used on supply systems such as floating, or earth-phase systems, where phase to earth voltages, pertinent to mains supply system type and nominal voltage, in excess of 500 VAC may exist; reference BS EN IEC 61010 – Annex I.

7.2 HMI, local control, indication & set-up

The high resolution LCD display operates from -50 °C up to +70 °C.

Non-intrusive selectors (control knobs) are provided on the actuator electrical control cover which also includes a window showing actuator position, status and alarm display.

The control cover may be rotated through 360° (90° increments) to suit actuator orientation/operator access.

Set-up is over a Bluetooth interface using the supplied Rotork Bluetooth® Setting Tool *Pro* handset. Set-up can also be achieved via manual setup using the actuator control knobs.

Standard local controls

Operation	Type	Function	Comments
Red control knob	Physical operation	Selects "Local", "Stop" or "Remote" control	Can be padlocked in each position (stop remains available) for site operational protection
Black control knob	Physical operation	Initiates local "Open" and "Close" operation	Spring-return to centre neutral position. Local control may be user-configured for inching action
Bluetooth	Rotork Bluetooth® Setting Tool *Pro*	Initiates local "Open" and "Close" operation	May be user-configured for Bluetooth operation over a nominal distance of 10 m (30 ft)

Standard local indication

Operation	Type	Function	Comments
Position indication	LCD – large character (25 mm/1")	Close icon – 0-99% (0.1% increments) – Open icon	Back-lit (power on) – operating temperature range -50 to +70 °C (-58 to +158 °F). Battery supported power off
Position indication	Coloured indication lights	Green (close), Red (open) Yellow (mid-travel)	Power on – lamp indication, colours can be reversed. Blinker and alarms can be configured to indicate movement or alarms
Status and alarm	LCD – position display status and alarm text	Real time status and alarm text integrated into position display	Power on – battery supported (when awake)
Status and alarm	LCD – text display	Real time status and alarm text via status	Power on – battery supported (when awake)
Status and alarm	General alarm Battery alarm	Display icons	At a glance indication, detail provided by status/alarm text

7.2 HMI, local control, indication & set-up cont.

IQ3 Perform range actuators benefit from advances in human-machine interface (HMI) design.

Rotork Insight 2 software facilitates actuator setup by pre-defining complete sets of instructions and settings. Each collection of settings can be saved as a 'mission' and quickly applied to individual actuators via the handheld Rotork Bluetooth® Setting Tool *Pro*.

IQ actuators can be interrogated and set up even when mains power is not available; the actuator can be configured and interrogated by using power from its display backup battery.

Actuator setup, configuration & data logging

Setting tool & LCD displays	Simple non-intrusive, interactive set-up procedure using supplied Rotork Bluetooth® Setting Tool *Pro* with read-back from LCDs. Settings include limits & torque, indication contacts and control options. Settings may be password protected.
PC/PDA	Using freeware Insight 2, actuators may be configured / analysed over the Bluetooth interface.
Data logging	Standard onboard data logger provides valve torque and starts profiles, operational statistics, events log. Actuator configuration and manufacturing data is also available. Files can be downloaded direct to PC, or to the Rotork Bluetooth® Setting Tool *Pro* (IS certified) for transport to office PC, which can then upload the file to Rotork's intelligent Asset Management (iAM) system for analysis. Freeware Insight 2 for PC is available to download at www.rotork.com

Reference documents
Refer to PUB002-039 for details of status and alarm text messages, alarm icons, help screens and actuator set up procedure.
Refer to PUB095-013 for Rotork Bluetooth® Setting Tool *Pro* manual.

7.2.1 User-friendly setup menus

The setup menu has been designed and structured to reduce reliance on having a written manual to hand. With large, clear characters, setup and configuration has never been so easy.

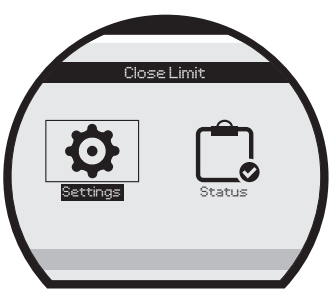

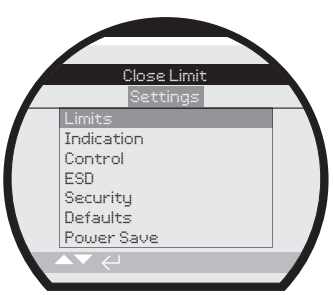

7.3 Remote control & indication

IQ3 Perform range actuators enable remote control and indication of valves for centralised control. Actuator control and indication forms are available to meet the requirements of the various site control systems, from simple manual push-button control through to sophisticated Distributed Control Systems (DCS) using relay outputs or digital "bus" network systems.

Standard remote controls

Operation	Type	Range	Comments
Open/Close/ Maintain Common	Positive switched 3 x opto-isolated inputs designed for fleeting or maintained contacts	20 - 60 VDC, 40 - 120 VAC	Actuator derived 24 VDC (120 VAC available as an option) or externally supplied, derived from the control system. Various forms available.
ESD Open interlock Close interlock Common	Positive switched 3 x opto-isolated inputs designed for maintained contacts	20 - 60 VDC, 40 - 120 VAC	ESD can be user-configured open, stayput or close, from an NO or NC contact. ESD has priority over all other applied local or remote control signals. Interlocks provide hardwired "permissive" protection (i.e. main and bypass control) and are active for local and remote or may be configured for remote signals only.
Drive enable (option)	Positive switched 1x opto-isolated input. (maintain input)	20 - 60 VDC, 40 - 120 VAC	Maintain input configurable as drive enable: actuator will not operate unless signal is applied.

Options

120 VAC actuator derived supply	5 VA rated	Actuator-derived supply for remote control.
125 VDC remote control	20 mA per input	Suitable for 125 VDC remote control supply - positive switching.
Negative switching	20 - 60 VDC	Suitable for negative switched systems applies to open, stop, close, ESD and interlocks.
Analogue control – option Folomatic	0 to 5/10/20 mA or volt ranges	Proportional control over the whole or part of valve stroke. Configurable for open, close or stayput on loss of analogue signal.
Hydraulic shock 'water hammer'/ surge protection – option Interrupter timer	Internal control system - Interrupter timer	Pulsed operation with independently adjustable on and off time periods in the range 1 - 99 seconds can be selected to operate over any portion of the closing or opening valve stroke, effectively reducing valve speed.

7.3 Remote control & indication cont.

Standard remote indication

Operation	Type	Range	Comments
Position, status and alarm indication	4 x configurable volt free latching contacts - S1 to S4. Single pole -single throw (SPST), configurable normally open (NO) or normally closed (NC)	5 mA to 5 A[1], 120 VAC, 30 VDC	Independently configurable using the supplied Rotork Bluetooth® Setting Tool *Pro* to signal one of the following: **Valve position:** fully open, fully closed or intermediate positions (0-99% open) **Status:** Valve opening, closing, moving, local stop selected, local selected, remote selected, open or close interlock active, ESD active **Valve alarms:** Torque tripped in mid travel, going open, going closed, valve jammed, handwheel operation **Actuator alarms:** Lost phase (3-phase IQ only), customer 24 VDC (120 VAC) supply lost, battery low, internal failure detected, thermostat tripped, service alarms
Actuator availability / fault	Monitor relay configurable change over contact	5 mA to 5 A, 120 VAC, 30 VDC	In available mode the relay will de-energise when the actuator is unavailable for remote control due to any one or more of the following conditions: • Power supply or control supply lost • local control selected • local stop selected • motor thermostat tripped • detected internal failure In fault mode, as above but ignores local/stop selection

Options

Operation	Type	Range	Comments
Position, status and alarm indication	Up to 8 configurable volt free latching contacts. Single pole – change over (SPCO)	5 mA to 5 A[1], 120 VAC, 30 VDC	Independently configurable using the supplied Rotork Bluetooth® Setting Tool *Pro* as per contacts S1 to S4 above
Analogue position feedback	Current position transmitter - CPT	4-20 mA output proportional to position	Auto range to set limits. Normally internally powered, available suitable for externally 'loop' powered - will default to 4 mA when actuator is powered down
Analogue torque feedback	Current torque transmitter - CTT	4-20 mA output proportional to output torque	Range 0% to 120% of rated torque (4 to 20 mA)
Auxiliary power supply	Maintains power to the actuator control on loss of mains	Nominal 24 VDC, 1 A (switching inrush 8 A max)	Customer supply maintains backlit display, CPT analogue indication and bus network communications during actuator power outages. Customer supply is isolated from internal control power for protection

Reference documents:
Refer to PUB002-041 IQ control and monitoring.

Note:
1 Maximum total combined current through all four relays not to exceed 8 A.

7.4 Fieldbus system control options

IQ3 Perform range actuators are available with the following network interface cards to enable remote control and indication using digital "bus" network systems communication to the Distributed Control Systems (DCS).

Standard remote controls

Network type	Comments
Pakscan™	An internally mounted *Pakscan* field unit for remote control and status indication. *Pakscan Classic* network operates on a 2-wire current loop containing up to 240 field devices with a loop length of up to 20 km without repeaters and host communications using Modbus protocol. For more information please refer to PUB059-020.
Modbus®	Modbus modules suitable for single or dual communication highways may be included in the IQ actuator, to provide Fieldbus communication of all the actuator control functions and feedback data. Data is carried on an RS485 data highway and the communications protocol used is Modbus RTU. System variables such as unit address and data baud rate are programmed over the Bluetooth data link. For more information please refer to PUB091-001.
Profibus®	A Profibus DP interface module is available to allow the actuator to be integrated into a Profibus network. Full compatibility with EN 50170 is provided and the Profibus network allows full actuator control and feedback of data to the host. For more information please refer to PUB088-001.
Foundation Fieldbus®	An IEC 61158-2 compliant Foundation interface module allows the actuator to be connected to a Foundation network. The device has link scheduler capability as well as digital and analogue function block capability. Foundation Fieldbus actuators can communicate directly between themselves without the need of a host supervisory system. For more information please refer to PUB089-001.
HART®	HART (Highway Addressable Remote Transducer) is a process control communication protocol. The signal consists of two parts, the analogue 4-20 mA current loop and a superimposed digital signal. Traditionally the 4-20 mA loop is used for control and the superimposed digital signal for feedback, diagnostics and configuration. Configuration and feedback using the HART digital signal can be achieved using the host connected to the actuator to select the parameters required. The majority of the user-configurable settings can be made over the HART communication protocol. See PUB092-001 for further details.
DeviceNet®	DeviceNet® is a communications protocol which utilises the CAN bus network. The IQ DeviceNet® module Electronic Data Sheet (EDS) file is used to set up the actuator parameters and allow system performance to be optimised. Status, alarms and control functions are available over the DeviceNet® network. See PUB090-001 for further details.

8 Protection and operating features

The IQ3 Perform control system incorporates the following standard operating features and comprehensive valve, actuator and control protection to ensure reliable valve operation and protection under all circumstances.

Fault / feature	Cause / operation	Function
Obstructed valve	Valve meets an obstruction or process conditions that prevent movement. Obstruction must be sensed and operation prevented to prevent damage to valve and actuator.	**Independent settable open and close torque switches** Torque switch will "torque trip" the actuator motor when the preset output torque level is reached. Torque switches can be set in the range 40% to 100% of rated torque. Torque trips are indicated on the actuator display and can be remotely signalled.
Jammed valve	Valve is stuck in its seat at the close or open position and operation fails to move the actuator and clear the limit position.	**Jammed valve protection** Torque switch will "torque trip" the actuator motor when the preset output torque level is reached or at 150% (nominal) if set to "Breakout Torque". Torque switches can be set in the range 40% to 100% of rated torque. Jammed valve protection prevents damage to valve and is indicated on the actuator display or remotely signalled.
Breakout torque	Provides increased torque above actuator rated for unseating sticky valves.	**Breakout torque** User-selectable, torque switches are automatically bypassed during the first 5% of travel from both open and close limit positions. This permits torque up to 150% (nominal) of rated to be developed during unseating, ensuring "sticky" valves do not cause unwanted torque trips. Refer also to jammed valve protection, above.
Torque switch hammer	Actuator repeatedly tries to move an obstructed valve in response to a standing control signal. This can cause damage to both valve and actuator.	**Anti-hammer protection** Once a torque trip occurs, the control prevents repeated operation in the same direction, as a response to a standing remote or local control signal. The actuator must be operated in the opposite direction and therefore moved away from the obstruction, which then has a chance to clear, before it can be signalled to run in the requested direction. Torque trips are indicated on the actuator display and can be remotely signalled.
Incorrect phase rotation (3-phase actuators only)	This condition is due to 3-phase supply wiring incorrectly connected to actuator. The actuator moves in the opposite direction to that signalled. At the end of travel, the wrong limit/torque switch is activated preventing the motor being de-energised and causing it to stall, with consequent valve damage and/or motor burn-out.	**Syncrophase™** Protection ensures that the actuator always runs in the correct direction corresponding to the applied control signal (open or close). The patented circuit senses connected phase rotation and ensures that the actuator always runs in the correct direction, by energising the appropriate motor control contactors/switches.
Lost phase / motor overheating (3-phase actuators only)	"Single phasing". One of the 3 phases applied to the actuator is lost due to a fault causing the motor to single phase i.e. attempts to run with only 2 of the 3 phases applied. The motor may fail to start (stall) or run unbalanced causing overheating and possible burn-out.	**Syncrophase™** The patented circuit monitors all 3 supply phases. If a phase is lost the Syncrophase circuit prevents the motor from being energised. If during operation, 1 phase is lost, this cannot be detected due to back-feed through the motor windings. However once operation stops, re-energising of the motor will be prevented. Lost phase is indicated on the actuator display and can be remotely signalled.
Motor overheating	Actuator duty cycle is exceeded causing the motor to overheat. This often occurs during factory acceptance testing /commissioning or during process start up.	**Motor thermostat protection** Two thermostats are embedded in the motor end windings (hottest part of the motor) which directly sense motor temperature. Thermostats will open circuit when set temperature is reached causing the motor to be de-energised. Thermostats will auto-reset once the motor has cooled sufficiently allowing operation to continue. Motor thermostat trips are indicated on the actuator display and can be remotely signalled.

8 Protection and operating features cont.

Fault / feature	Cause / operation	Function
Instantaneous reversal	The control system instantaneously reverses the control signal, which causes the actuator to reverse direction with associated inertial stress to valve drive and internal motor switching surges.	**Instantaneous reversal protection** A delay of 300 ms is automatically applied between reversals, allowing the actuator to come to rest before responding to the reverse control signal.
Actuator fault	Detected actuator fault.	**ASTD (Automatic Self-Test & Diagnosis)** ASTD detects any internal control system failures preventing operation. Detected internal control system faults are indicated on the actuator display, allowing rapid diagnosis and can be remotely signalled. In addition, diagnostic screens can be accessed allowing problem to be pin-pointed.
Remote control circuit failure (actuator derived remote control supply only)	Loss of remote control.	**Remote Control supply** The 24 VDC internal power supply made available for remote control switching is protected by an auto-reset fuse device. Should the power drawn from the supply exceed its rating (due to a remote control wiring fault, etc.), the fuse will disconnect the supply. Once the fault is cleared the supply will automatically be reinstated. Loss of internal supply is indicated on the actuator display and can be remotely signalled.
Spurious operation	Operation commanded due to unintended or spurious remote control signals leading to process problems or hazards.	**Conditional control** This is user-selectable. The interlock input can be configured for “conditional control”, being active only for remote control. In this mode, for the actuator to respond to a remote control signal, two signals must be applied simultaneously, one to the control input and one to the interlock input. If an unintended or spurious signal is applied only to the control input it will be ignored. Intended signals can therefore be verified by applying a second “permissive” signal, effectively preventing spurious operation.
Emergency Shutdown (ESD)	Priority action where the valve is required to stayput or move to a safe end-of-travel position, determined by the process - open or closed limit.	**Dedicated ESD control input** User-configurable, the ESD action has priority over any existing or applied local or remote control signal. ESD can be configured to open, close or stayput depending on the process requirements. ESD must be derived from a latched type, normally open or normally closed ESD contact (configurable) and may be configured to override local stop, interlocks or interrupter timer.
Hammerblow	Break free from sticky valve seats or obstructions.	**Integral hammerblow** Isolating (Class A and B, S2 duty) IQ actuators include a lost motion 'hammerblow' feature within the drive train. This is designed to provide an impact force on motor start to break free from sticky valve seats or obstructions. The hammerblow effect is applied every time an electrical or manual change of direction occurs. Modulating (Class C, S4 duty) actuators do not include hammerblow to improve response time.

9 Components

Details of major actuator mechanical and electrical/electronic components are provided below:

9.1 Handwheel

A handwheel is provided to allow manual operation of the valve during electrical power interruption. Handwheel size and mechanical advantage are generally designed in accordance with standards EN 12570 and AWWA C540 (American Water Works Association) to give the most efficient compromise of force and turns for emergency operation.

Handwheel types: IQ, IQS, IQD, IQM, IQML, IQL

Actuator size	Standard type / ratio	Option
10, 12, 18	Direct / 1:1	Geared / 5:1
19, 20	Direct / 1:1	Geared / 13.3:1
25	Geared / 13.3:1[1]	Direct / 1:1[2]
35	Geared / 22.25:1	
40	Geared / 15:1	Geared / 30:1
70, 90, 91	Geared / 30:1	Geared / 45:1
95	Geared / 45:1	Geared / 30:1[2]

Note:
1 IQM25 and IQML25 standard ratio is 1:1.
2 Rimpull does not meet the requirements of EN12570 at actuator rated torque. May be used for lower torque applications or where higher handwheel forces are acceptable.

Handwheel types: IQT

Actuator	IQTF50	IQTF100	IQT125 IQTF125 IQTM125	IQT250 IQTF250 IQTM250	IQT500 IQTF500 IQTM500	IQT1000 IQTF1000 IQTM1000	IQT2000 IQTF2000 IQTM2000	IQT3000 IQTF3000 IQTM3000
Turns for 90º	26	26	88	88	88	83	83	83

During electric operation of the actuator, the handwheel is mechanically disengaged from the drive. To engage handwheel operation, push the hand/auto selection lever down and release, after which handwheel operation remains selected. When electrical operation takes place, the actuator will automatically return to motor drive without lever or handwheel kickback.

The hand/auto selection lever incorporates a facility for locking in the hand or auto positions using a 6 mm diameter hasp padlock (not supplied by Rotork), preventing engagement of motor drive (locked in hand) or engagement of handwheel drive (locked in auto). Emergency disengagement of motor drive can be selected by pushing down and holding the hand/auto lever during electric operation.

9.2 Drive train

The drive train and motor use the proven basic design principles employed for over 50 years. Simple, reliable and robust, the components are oil bath lubricated (for life).

IQ actuators are factory filled for life with premium quality gear oil selected for the application. Standard oils are automotive grades that are easily available worldwide and have been used successfully for over 50 years. Oil lubrication out-performs grease over a wide temperature range and allows installation in any orientation. It has none of the problems associated with grease such as separation at elevated temperatures and "tunnelling" at lower temperatures, where grease is thrown away from rotating components creating a void or tunnel in the grease around components that require lubrication.

Lubrication

IQ range size	Standard temp. Range -30 to +70 °C (-22 to +158 °F)	Option food grade -20 to +70 °C (-4 to +158 °F)	Option low temp. -50 to +40 °C (-58 to +104 °F)
All sizes	Fuchs TITAN GEAR MPSAE80 APIGL-4	HYDRA LUBE GB	MOBIL SHC624

IQT range size	Standard temp. Range -50 to +70 °C (-58 to +158 °F)	Option food grade -20 to +70 °C (-4 to +158 °F)
50 - 2000	Fuchs RENOLIN ZAF15LT	HYDRA LUBE GB LIGHT
3000	Fuchs RENOLIN UNISYN OL 32	

Food grade: Lubricant is a synthetic, non-aromatic hydrocarbon mixture with PTFE and other additives. It does not contain chlorinated solvents. Food grade grease used in assembly and thrust bearings is Hydra Lube WIG Medium-NLGI-123.

Note: Oils and lubricants are subject to change due to supply availability at our worldwide manufacturing facilities. For detailed information please contact your local Rotork agent.

9.3 Corrosion protection

All IQ3 Perform actuator finishes are tested in accordance with Rotork 1,000 hour cyclic salt spray test procedure which is the most realistic and arduous test cycle applicable. The test combines cyclic salt spray, drying and humidity at elevated temperatures on complete factory-built actuators. This tests the finish and the various substrate materials, fixings and interfaces that make up an actuator. Substrate materials and finishes are selected to provide maximum corrosion resistance combined with good adhesion. Paint finishes fully conform to the requirements of ISO12944.

Corrosivity category	IQ paint solution	Exterior environment	Interior environment
C1	Standard polyester powder coat (P1)	N/A	Heated buildings with clean atmospheres e.g. offices, shops, schools and hotels.
C2		Atmospheres with low levels of pollution, e.g. rural areas.	Unheated buildings where condensation may occur, e.g. depots and sports halls.
C3		Urban and industrial atmospheres, moderate SO_2 pollution, e.g. city centres and coastal areas with low salinity.	Production rooms with high humidity and some air pollution, e.g. food processing plants, laundries, breweries and dairies.
C4	Standard polyester powder coat plus offshore coating on ferrous materials (P2)	Industrial and coastal areas with moderate salinity, e.g. coastal ship and boatyards.	Areas with permanently aggressive atmospheres, e.g. chemical plants and swimming pools.
C5-M (marine)		Coastal and offshore areas with high salinity, e.g. offshore rigs and boats.	Areas with extremely aggressive atmospheres containing high humidity, salinity and pollutant concentration, e.g. cooling towers and boats.
C5-I (industrial)	Full offshore coating on all materials (PX)	Industrial areas with high humidity and aggressive atmospheres, e.g. water treatment plants and power stations.	Areas with extremely aggressive atmospheres containing high humidity and high pollutants, e.g. chemical plants and boiler houses.

The above table details paint protection levels based on high durability (>15 years) as per ISO12944-2.

9.4 Motor

IQ3 Perform actuators utilise purpose-designed motors that are integral to the actuator. As such, these motors do not fall within the scope of IEC 60034 or MG1, however they do meet the applicable requirements, where appropriate, of motor design for actuator operation.

Actuator type	Duty classification	Comments
IQ	On-Off & inching (class A & B)	Class F insulated, 3-phase squirrel cage motor incorporating thermostat protection. Low inertia design. Class H available as an option where hazardous area certification does not limit temperature rise to "T4" 135 °C.
IQS	On-Off & inching (class A & B)	Class F insulated, 1-phase capacitor / run start squirrel cage motor incorporating thermostat protection. Low inertia design. Class H available as an option where hazardous area certification does not limit temperature rise to "T4" 135 °C.
IQD	On-Off & inching (class A & B)	Class F insulated, permanent magnet DC brush motor incorporating thermostat protection.
IQM	Modulating (class C)	Class F insulated, 3-phase squirrel cage motor incorporating thermostat protection. User-selectable thyristor controlled dynamic braking available. Low inertia design. Class H available as an option where hazardous area certification does not limit temperature rise to "T4" 135 °C.
IQT[1]	On-Off & inching	Class H insulated, permanent magnet 24 VDC motor[2] (DC supply derived internally from 3-phase or 1-phase supplies) incorporating thermostat protection. Low inertia design.
IQTM[1] **/ IQTF**[1]	Modulating	Class H insulated, permanent magnet 24 VDC motor (DC supply derived internally from 3-phase or 1-phase supplies) incorporating thermostat protection. Low inertia design.

Note:

1 Speed control independent of load, temperature and supply voltage.
Speed is automatically reduced on fast operating units to reduce inertial impact when running into an end stop (5% from user set position limit).
Speed is automatically adjusted when positioning the actuator via analogue or network control to improve positional accuracy.
A high speed option is available for IQT50, IQT100 and IQT125. The speeds for clockwise and counterclockwise rotation can be different.

2 IQT3000 uses a 36 VDC permanent magnet motor.

9.5 Power module

The power module for IQ3 Perform actuators produces internal power supplies for control systems and remote control derived from the actuator electrical supply. It also contains the motor control and switching components.

Actuator type	Internal power supplies	Motor switching
IQ	Split bobbin transformer producing control circuits, option card supplies and supply for 24 VDC actuator fed remote control (120 VAC option).	Reversing contactor assembly, mechanically and electrically interlocked. 24 VDC coil up to and including size IQ35 and 120 VAC for IQ40 and above.
IQD	DC-DC converter isolates the DC actuator supply from internal supplies for control and 24 VDC supply for actuator fed remote control. Fuse protected. Incorporates sleep circuit for power reduction when used on solar power derived DC supplies.	Reversing contactor assembly, mechanically and electrically interlocked.
IQS	Split bobbin transformer producing control circuits, option card supplies and supply for 24 VDC actuator fed remote control (120 VAC option). Fuse protected.	Solid state thyristor array for motor switching/ reversal and capacitor starting. Includes snubber protection and timing control.
IQM	Split bobbin transformer producing control circuits, option card supplies and supply for 24 VDC actuator fed remote control. Fuse protected.	Solid state thyristor array for motor switching/ reversal and braking (user-selectable). Includes snubber protection and timing control.
IQT / IQTF / IQTM	Split bobbin transformer producing control circuits, option card supplies and supply for 24 VDC actuator fed remote control (120 VAC option). Fuse protected.	Solid state motor switching incorporating motor speed control.
IQT / IQTF / IQTM 24 VDC actuator power supply only	DC-DC converter isolates the DC actuator supply from internal supplies for control and 24 VDC supply for actuator fed remote control. Fuse protected.	Rectifier and fuse protection ensures correct polarity and protection of supply. Solid state motor switching incorporating motor speed control.

9.6 Torque sensor

State of the art piezo thrust sensor measures motor shaft thrust produced as a reaction to output torque developed in the motor worm and wheel gear assembly. Thrust measured is directly proportional to output torque. The piezo sensor develops a voltage proportional to shaft thrust (output torque) which is amplified and then measured by the control module. Output torque is controlled by switching the motor off when the set torque limits have been reached. This system allows the torque to be displayed via the LCD display and captured by the data logger in the form of valve torque profiles, statistical torque information and the event log.

9.7 Position sensor

Using the latest technology and after years of testing, the patented Rotork IQ absolute encoder is contactless, has only four active parts, can measure up to 8,000 output turns with a resolution of 7.5° and has redundancy and self checking. Unlike existing absolute encoder designs, this technological breakthrough increases position sensing reliability while providing zero-power position measurement.

9.7.1 Mechanical position indication

A mechanical position indication option is available upon request.

9.8 Control and User Interface (UI) modules

The control and UI modules for IQ3 Perform actuators are common and take the form of a PCB with on-board liquid crystal displays (LCD) and a control PCB.
For IQM actuators the control module incorporates "fast remote" mode (24 VDC remote control only) allowing rapid actuator switching down to 100 ms pulses for precise positioning.

Logic controlled, the control module is programmed over the non-intrusive Bluetooth interface with set-up configuration for torque, limits indication and control features undertaken using the Rotork Bluetooth® Setting Tool *Pro* handset.
Local and remote control signals, torque and position are monitored to switch the actuator motor in the correct direction or off.

Standard IQ control features are shown below:

Feature	Type	Specification
Remote control	Input	User switched Open/Close/Stop/ESD and interlock signals. Opto-isolated inputs for protection.
Local control	Input	Open/Close/Stop and Local/Remote selection. Non-intrusive control switches are magnetically operated so there is no penetration of covers.
Position	Input	Digital signal derived by absolute position sensor. Resolution to 7.5° of output rotation. Limit range configurable between 2.5 and 8,000 output turns.
Torque	Input	The piezo thrust sensor directly measures output torque and converts value to a voltage signal. Torque can be set in the range 40% to 100% of rated torque with the additional facility to bypass torque switching.
Set-up	Input	Set-up is non-intrusive, requiring no covers be removed and allows all settings to be configured for valve and process requirements. All settings can be password protected. Set-up can be achieved over the Bluetooth interface using the supplied Rotork Bluetooth® Setting Tool *Pro* (BTST). Set-up can also be achieved using manual setup via the local control knobs.
Indication contacts	Output	Four Volt free contacts S1 to S4 can be configured for a variety of position, status and alarm indication for remote indication and monitoring.
Data logger	Output	The control module includes a data logger which stores torque, position and operational data in non-volatile memory for download and analysis. Data logs can be downloaded via Bluetooth to the supplied Rotork Bluetooth® Setting Tool *Pro* or to a notebook PC. Data is date/time stamped. The data log can be examined using freeware Insight 2 for PC or uploaded to Rotork's intelligent Asset Management (iAM) system for analysis.
Memory	System	All configured settings are stored in non-volatile EEPROM memory (does not require power).
Micro-controller	System	Provides all control function logic, setup programming and allied system requirements. Software is field-upgradeable for future enhancements. The micro-controller is widely used in the automotive industry with a long track record and a very reliable history.

9.9 Conduit / cable Entries

IQ3 Perform gearcases are machined with conduit/cable entries as indicated below. Alternative adapters are available.

Number of entries required and adapter type must be specified with the order.

Actuator type	Gearcase entries	Adapter 1	Adapter 2
IQ, IQM, IQS, IQD	3 x M25 plus 1 x M40	3 x 1" plus 1 x 1.5" ASA NPT	3 x PG16 plus 1 x PG29
IQT, IQTM, IQTF	4 x M25	4 x ASA NPT 0.75"	4 x PG16

IQ3 Perform range actuators are despatched with transit plugs fitted into the conduit entries. It is the responsibility of the installer to ensure the appropriate cable/conduit adapters, cable glands and/or blanking plugs are fitted in order to maintain hazardous area certification and ingress protection levels. Certified adapters and blanking plugs are available as optional extras.

9.10 Terminals

The terminal compartment for IQ3 Perform range actuators takes the form of a separately-sealed compartment containing segregated metric thread M5 power and M4 control terminals. Terminal screws and washers are supplied with the actuator. Terminals are designed to accept ring tag crimped field wiring conductors up to 16 mm^2 for power and 4 mm^2 for control/indication. The terminal compartment cover carries a terminal identification code card. Each actuator is despatched with the applicable Installation and Maintenance manual, actuator wiring diagram and remote control connection schematic.

9.11 Wiring

IQ3 Perform range actuators utilise jig-built wiring harnesses of individually numbered, tropical grade PVC insulated, stranded conductors. All internal control connections to the printed circuit boards use unique or polarised plugs and sockets.

9.12 Battery

The battery provides power to support the LCD display and remote (relay) indication when the main actuator supply is unavailable. The battery also provides power to enable actuator settings to be made using the Rotork Bluetooth® Setting Tool *Pro*, the Rotork app or via manual setup using the actuator control knobs; commissioning can take place at premises without power or the right voltage, or after installation but before site cabling is completed.

The standard 9 V battery is available worldwide with a high/low temperature type available from Rotork.

As all settings are stored in non-volatile memory and position is sensed by the Rotork absolute encoder, security of configuration and position is always assured. The actuator can be operated electrically and by handwheel operation without a battery fitted.

Based on experience gained over 20 years of typical applications, the expected battery life is up to five years.

Battery life is however subject to temperature and, at elevated and reduced temperatures, may be reduced. The actuator indicates battery status locally and remotely.

We offer specialist expertise to support mission-critical flow control and instrumentation solutions across oil and gas, water and power, and chemical, process and industrial markets.

With a global presence and decades of experience, we offer services including installation, commissioning, Reliability Services, Intelligent Asset Management (iAM), product upgrades, spare parts, and overhauls.

Our engineers are highly trained, ensuring consistent, high-quality service worldwide. We operate dedicated workshops for the repair, calibration and testing of our products and only use genuine parts to guarantee top-level performance and reliability.

Our service offering covers four key areas:

- **Connected Services** including Rotork's Intelligent Asset Management (iAM) system
- **Field Services** including site support, upgrade solutions, valve automation and spares
- **Reliability Services** including health checks and product maintenance
- **Support Services** including technical training and support

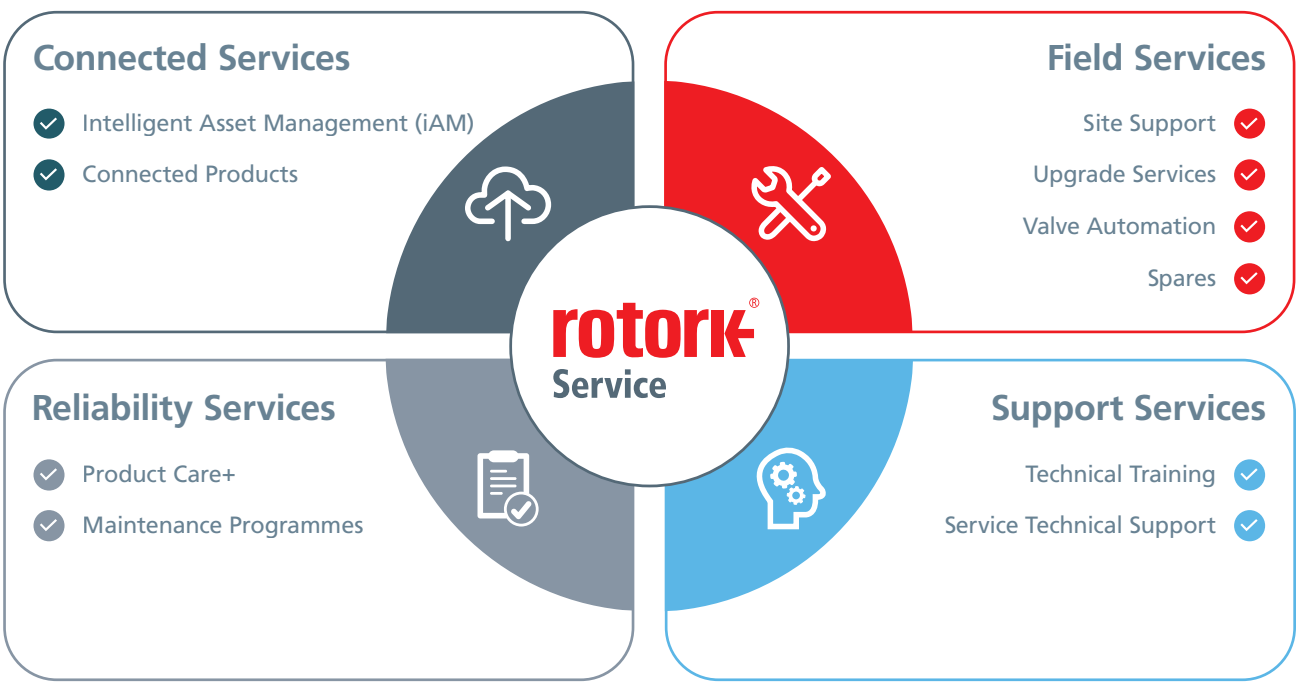

Reduce downtime, extend the lifespan of assets, and optimise performance with Rotork's comprehensive service solutions.

Our focus on Full Lifecycle Experience provides world-class service and ensures the reliability of your Rotork products.

rotork

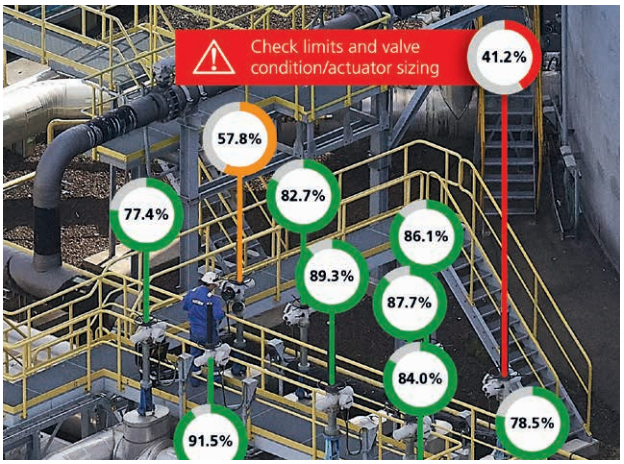

Connected Services

Intelligent Asset Management (iAM) is a cloud-based system for intelligent Rotork actuators and the flow control equipment they operate. Effective asset management and maintenance are essential for maintaining site uptime.

Reliability Services

Reliability Services is a customisable approach to maintenance, with options that provide progressively increased levels of coverage and support. Our tailor-made programmes increase reliability and availability and allow customers to have flexibility about what services are most appropriate for them.

Field Services

Site Support

Benefit from our on-site support, from installation to emergency repairs.

Upgrade Solutions

Make sure your assets are prepared for the future with suitable upgrade options.

Valve Automation

Achieve precise and consistent flow control with automation of existing valves and replacement actuator/valve packages.

Spares

Maximise performance and reliability with genuine OEM spare parts.

Support Services

Technical Training

Our products and solutions are used in mission-critical applications and it is critical that any workforce is highly trained to ensure a safe and efficient plant. We provide advanced technical training from our strategically located facilities around the world.

Technical Support

We provide expert technical support exactly when you need it – trusted by global industries for over 60 years. Our technical experts draw on decades of our experience to provide you with the right answers and solutions.

rotork®

Contact us now

mail@rotork.com
www.rotork.com

PUB002-400-00
Issue 04/25