NO	PART NAME	MATERIAL	Q'TY	REMARK
1	WINDOW	강화유리	1	
2	LEVER	SB41	1	
3	TOP COVER	AC2B	1	
4	BODY	AC2B	1	
5	HANDLE	AC2B	1	
6	SPRING COVER	AC2B	1	
7	SPRING BODY	AC2B	1	
8	BASE	GC25	1	
9	BUSHING	SM45C	1	
10	OPTION HOUSING	AC2B	1	

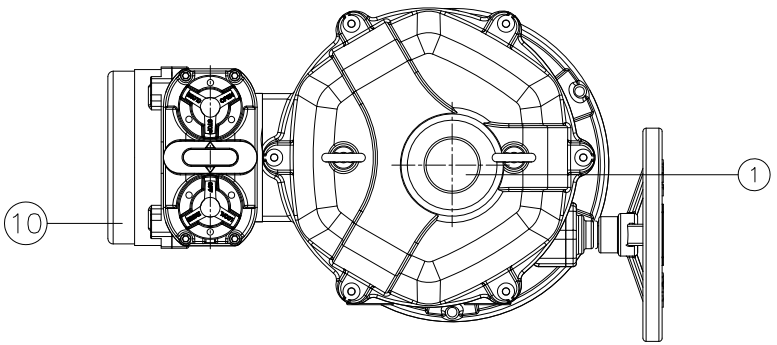

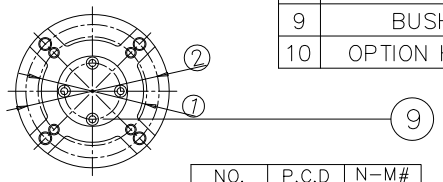

BASE

NO.	P.C.D	N-M#
1	ø102	4-M10
2	ø125	4-M12

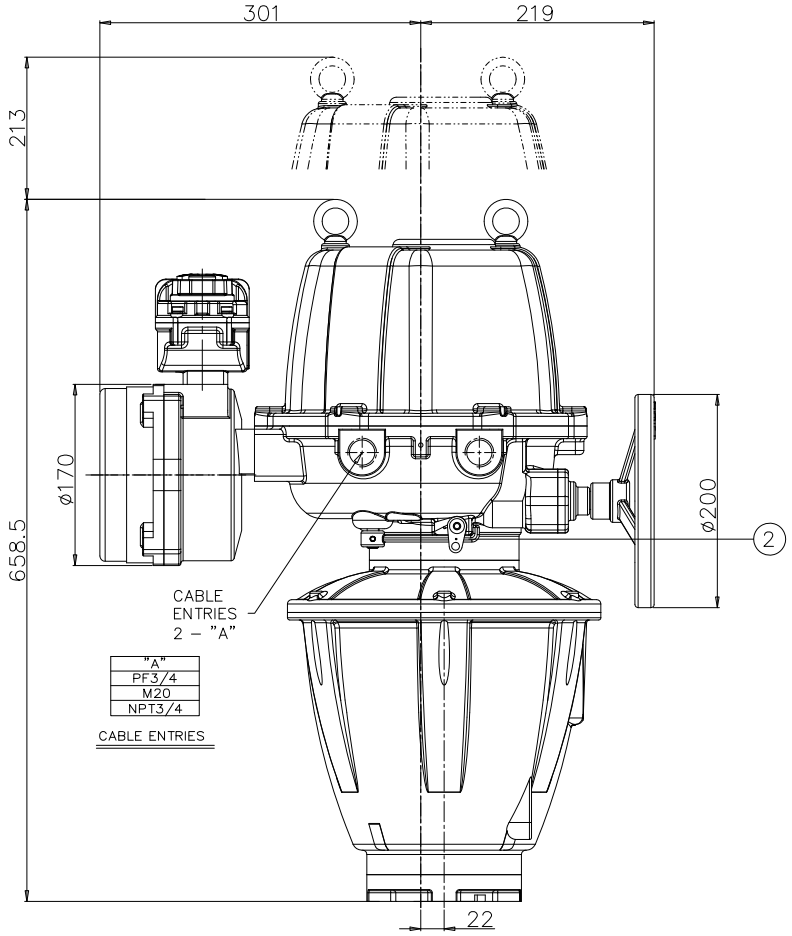

"A"
PF3/4
M20
NPT3/4

CABLE ENTRIES

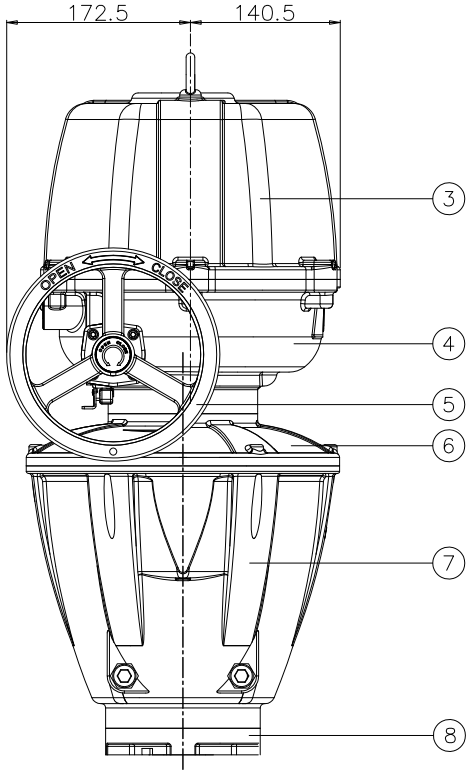

SR30	1
APPLICATION	

DRAW	H.S PARK	PROJ.	SCALE 1/1	PART NAME	SR30 ASS'Y
		DIM. mm	DATE 13.01.16		
CHECK	M.Y HWANG	NOAH Actuation		DWG NO.	R030-711-C
APPD		NOAH ACTUATION CO., LTD		1 OF 1 SHEET	DWG SIZE A1