NO	PART NAME	MATERIAL	Q'TY	REMARK
1	WINDOW	PC	1	
2	TOP COVER	AC2B	1	
3	BODY	AC2B	1	
4	LEVER	SM45C	1	
5	INSERT	FC0208	1	

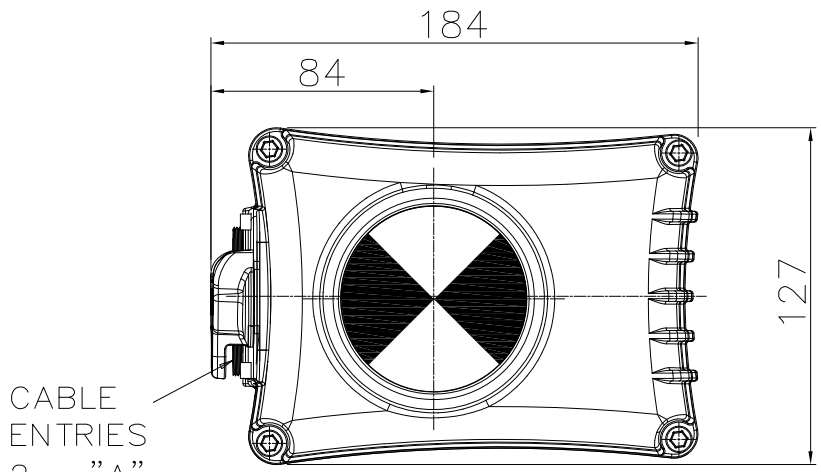

"A"
PF1/2
M20
NPT1/2

CABLE ENTRIES

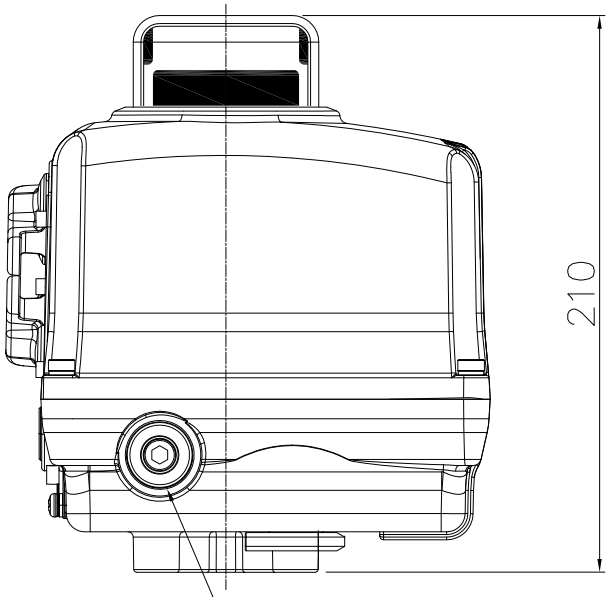

MANUAL OPERATION

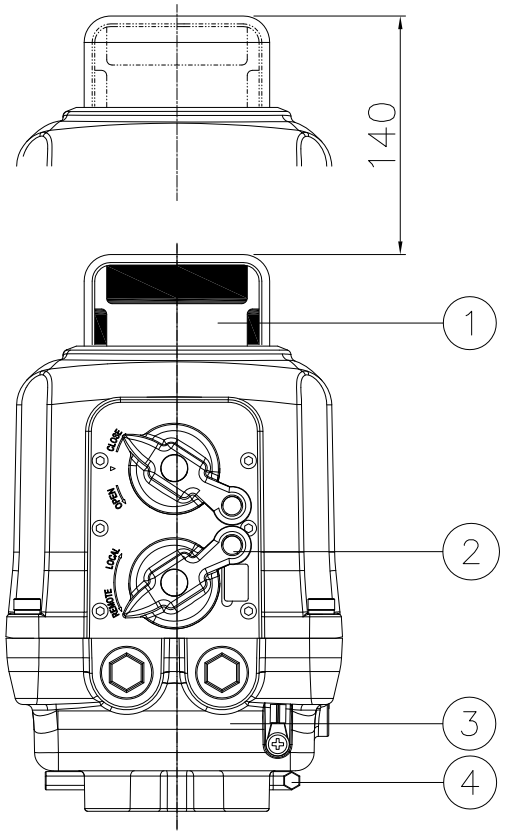

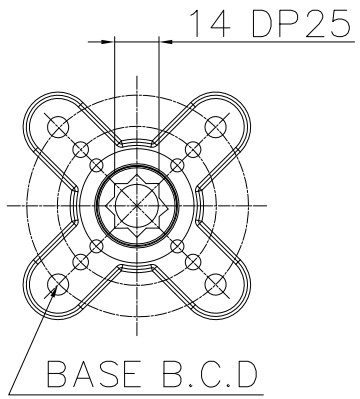

ISO 5211 F03(ø36 M5TAP DP9)
ISO 5211 F05(ø50 M6TAP DP11)
ISO 5211 F07(ø70 M8TAP DP13)

DRIVE INSERT

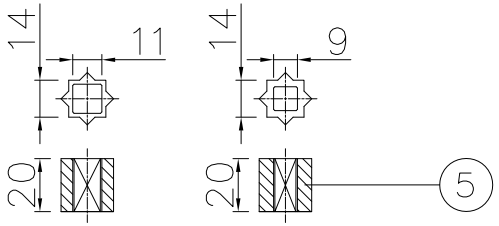

SA09L	1
SA05L	1
APPLICATION	

DRAW	S.H KYUNG	PROJ.	SCALE 1/1	PART NAME	SA05L, SA09L LCU ASS'Y
		DIM. mm	DATE 13.10.08		
CHECK	M.Y HWANG	NOAH ACTUATION CO., LTD		DWG NO.	S05L–703–B
APPD				1 OF 1 SHEET	DWG SIZE A1